Fig. KBG20

Bronze Gate Valve
Non-Rising Stem
BS 5154 PN20

Notes:

- Designed to BS 5154
- Pressure Rating: PN20
- Working Medium: Water, Oil, Steam
- Threaded Bonnet
- UK end connection: BS21 Taper Threaded (ISO 7) / BS EN10226-2
- Available with NPT Threads, subject to minimum quantities
- Available with Lockshield (Fig. No. KBG20LS), subject to minimum quantities

Material Specifications

Description	Material
Body	Bronze CC491K
Bonnet	Bronze CC491K
Stem	DZR Brass CW602N
Disc	Bronze CC491K
Handwheel	Aluminium

Dimensions

DN		d	L	H	D
Inches	MM				
½”	15	12.7	49.5	103	52
¾”	20	19.1	53.5	109	52
1”	25	25.4	62	133	70
1¼”	32	31.8	70	145	70
1½”	40	38.2	77	170	92
2”	50	50.9	87	206	92.5

All dimensions are nominal (indicative)
Actual dimensions may vary

Fig. KBG20LS

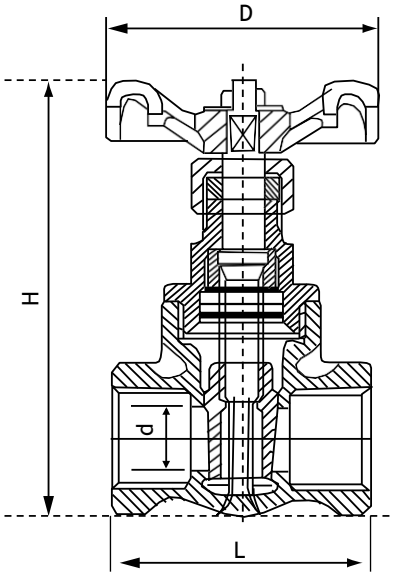

Fig. No. KBG20

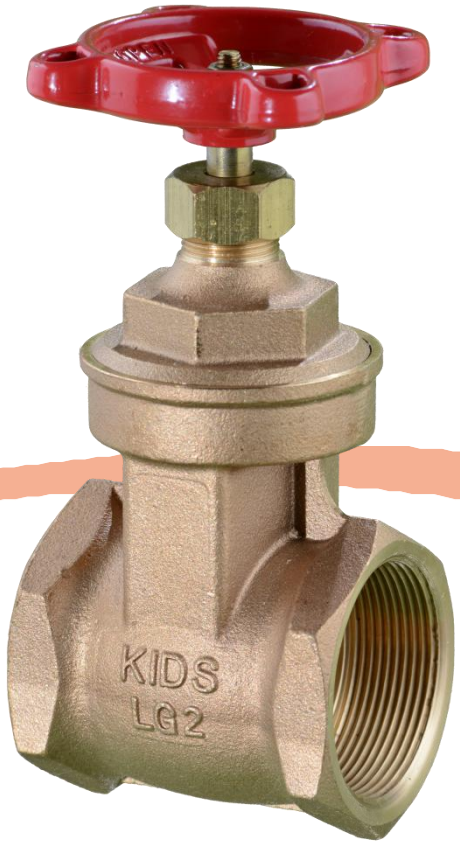

Fig. KBG20

KIDS

Fig. KBG25

Bronze Gate Valve
Non-Rising Stem
BS 5154 PN25

Notes:

- Designed to BS 5154
- Pressure Rating: PN25
- Working Medium: Water, Oil, Steam
- Threaded Bonnet
- UK end connection: BS21 Taper Threaded (ISO 7) / BS EN10226-2
- Available with NPT Threads, subject to minimum quantities
- Available with Lockshield (Fig. No. KBG25LS), subject to minimum quantities

Material Specifications

Description	Material
Body	Bronze CC491K
Bonnet	Bronze CC491K
Stem	DZR Brass CW602N
Disc	Bronze CC491K
Handwheel	Aluminium

Dimensions

DN		L	H	D
Inches	MM			
½”	15	51	82	52
¾”	20	55	95	65
1”	25	63	118	70
1¼”	32	71	144	79
1½”	40	73	166	92
2”	50	83	190	103

All dimensions are nominal (indicative)
Actual dimensions may vary

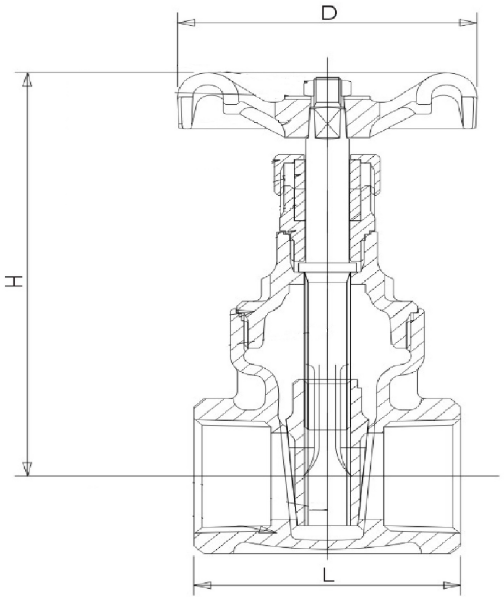

FIG. KBG25 PN25

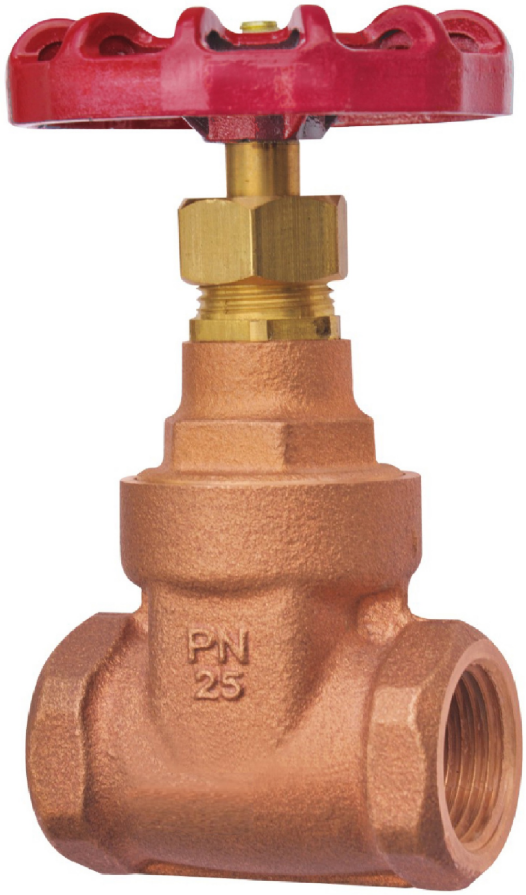

FIG. KBG25 PN25

KIDS

Fig. KBG32RS

Bronze Gate Valve
Rising Stem
BS 5154 PN32

Notes:

- Designed to BS 5154
- Pressure Rating: PN32
- Working Medium: Water, Oil, Steam
- Threaded Bonnet
- UK end connection: BS21 Taper Threaded (ISO 7) / BS EN10226-2
- Available with NPT Threads, subject to minimum quantities

Material Specifications

Description	Material
Body	Bronze CC491K
Bonnet	Bronze CC491K
Stem	DZR Brass CW602N
Disc	Bronze CC491K
Handwheel	Aluminium

Dimensions

DN		L	H	D
Inches	MM			
½”	15	51	129	52
¾”	20	55	159	65
1”	25	63	189	70
1¼”	32	72.5	219	78
1½”	40	73	246	92
2”	50	83	301	92

All dimensions are nominal (indicative)
Actual dimensions may vary

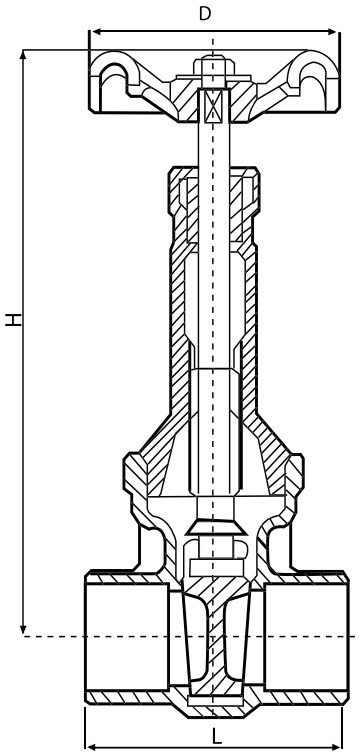

Fig. No. KBG32RS

KIDS

Fig. KIG16

Cast Iron Gate Valve
Non-Rising Stem
BS5150 PN16

Notes:

- Designed to BS5150
- Pressure Rating: PN16
- Working Medium: Water, Oil, Steam
- Flanged to BS4504 / BS EN1092-2
- Rising stem available
- DI Body available upon request
- Other flange standards available upon request
- Other PN pressure ratings available upon request
- ANSI standards available upon request.

Material Specifications

Description	Material
Body	Cast Iron
Body Seat Ring	Cast Bronze
Wedge Seat Ring	Cast Bronze
Wedge	Cast Iron
Stem	Stainless Steel 416
Bonnet	Cast Iron
Handwheel	Carbon Steel

Dimensions

DN	L	H	D	D1	D2	b	f	n-ød
65	190	312	122	145	185	20	3	4-ø 18
80	203	327	138	160	200	22	3	8-ø 18
100	229	400	158	180	220	24	3	8-ø 18
125	254	489	188	210	250	26	3	8-ø 18
150	267	544	212	240	285	26	3	8-ø 22
200	292	632	268	295	340	30	3	12-ø 22
250	330	772	320	355	405	32	3	12-ø 26
300	356	863	378	410	460	32	4	12-ø 26

All dimensions are nominal (indicative)
Actual dimensions may vary

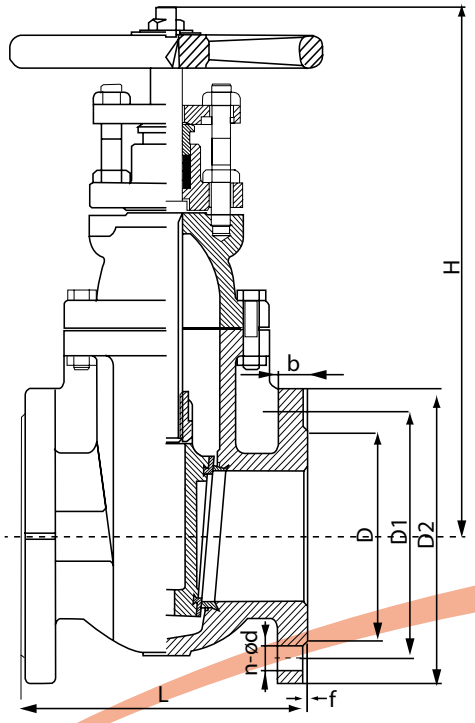

Fig. No. KIG16

KIDS

Fig. KIG16RS

Cast Iron Gate Valve
Rising Stem
BS5150 PN16

Notes:

- Designed to BS5150
- Pressure Rating: PN16
- Working Medium: Water, Oil, Steam
- Flanged to BS4504 / BS EN1092-2
- Outside screw & yoke, rising stem
- Face to Face: BS EN558-1
- Other flange standards available upon request
- Other PN pressure ratings available upon request
- ANSI standards available upon request.

Material Specifications

Description	Material
Body	Cast Iron
Body Seat Ring	Bronze
Wedge Seat Ring	Bronze
Wedge	Cast Iron
Stem	SS416
Bonnet	Cast Iron
Handwheel	Carbon Steel

Dimensions

DN	L	D1	D2	b	f	n-ød
65	190	145	185	20	3	4-ø 18
80	203	160	200	22	3	8-ø 18
100	229	180	220	24	3	8-ø 18
125	254	210	250	26	3	8-ø 18
150	267	240	285	26	3	8-ø 22
200	292	295	340	30	3	12-ø 22
250	330	355	405	32	3	12-ø 26
300	356	410	460	32	4	12-ø 26

All dimensions are nominal (indicative)
Actual dimensions may vary

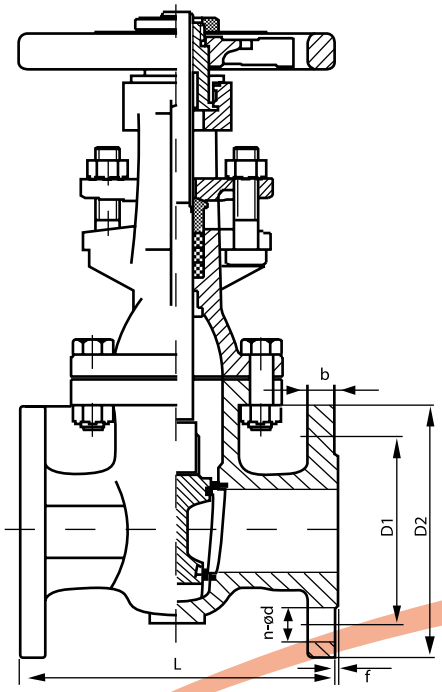

Fig. No. KIG16RS

KIDS

Fig. KIRIG16

Ductile Iron Resilient Seat Gate Valve
Non-Rising Stem
BS5163 PN16

Notes:

- Designed to BS5163
- Pressure Rating: PN16
- Working Medium: Water, Oil, Steam
- Flanged to BS4504 / BS EN1092-2
- Rising stem available on request
- Other flange standards available upon request
- Other PN pressure ratings available upon request
- ANSI standards available upon request.

Material Specifications

Description	Material
Body	Ductile Iron
Wedge	Ductile Iron & EPDM
Bonnet	Ductile Iron
Stem	SS
Handwheel	Carbon Steel

Dimensions

DN	L	H	W	D2	D1	D	f	b	n-ød
65	190	237	180	185	145	118	3	16	4-ø 19
80	203	274	180	200	160	132	3	16	8-ø 19
100	229	300	180	220	180	156	3	16	8-ø 19
125	254	364	240	250	210	184	3	17	8-ø 19
150	267	404	240	285	240	211	3	17	8-ø 23
200	292	497	300	340	295	265	3	18	12-ø 23
250	330	590	350	400	355	319	3	20	12-ø 28
300	356	667	350	455	410	370	4	22.50	12-ø 28

All dimensions are nominal (indicative)
Actual dimensions may vary

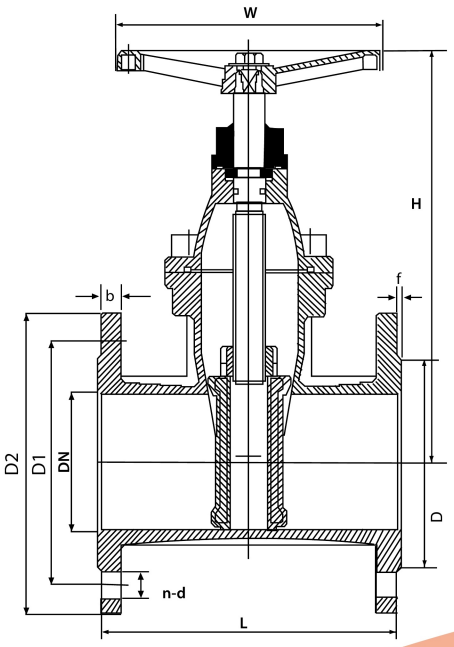

Fig. No. KIRIG16

KIDS

Fig. KIRIG25

Ductile Iron Resilient Seat Gate Valve
Non-Rising Stem
BS5163 PN25

Notes:

- Designed to BS5163
- Pressure Rating: PN25
- Working Medium: Water, Oil, Steam
- Flanged to BS4504 / BS EN1092-2 PN25
- Rising stem available on request
- Other flange standards available upon request
- Other PN pressure ratings available upon request
- ANSI standards available upon request.

Material Specifications

Description	Material
Body	Ductile Iron
Wedge	Ductile Iron & EPDM
Stem	SS420
Bonnet	Ductile Iron
Handwheel	Carbon Steel

Dimensions

DN	L	H	W	D2	D1	D	f	b	n-ød
65	190	264	255	185	145	118	3	16	8-ø 19
80	203	287	255	200	160	132	3	16	8-ø 19
100	228	321	255	235	190	156	3	16	8-ø 23
125	254	372	306	270	220	184	3	16	8-ø 28
150	266	410	306	300	250	211	3	17	8-ø 28
200	292	503	306	360	310	274	3	19	12-ø 28
250	330	603	406	425	370	330	3	21.5	12-ø 31
300	356	683	406	485	430	389	4	23.5	16-ø 31

All dimensions are nominal (indicative)
Actual dimensions may vary

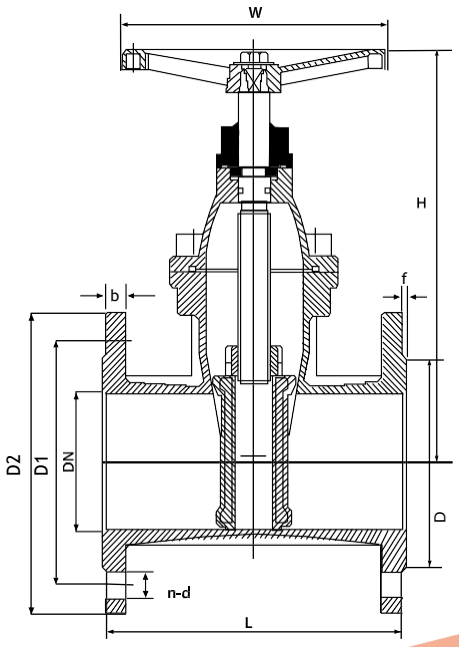

Fig. No. KIRIG25

KIDS

Fig. KBL25
Bronze Ball Valve
PN25

Notes:
- Pressure Rating: PN25
- Working Medium: Water, Oil, Steam
- Blow-out proof stem
- Full bore chrome plated ball
- PTFE seats and stem seals.
- BS21 Taper Threaded (ISO 7) / BS EN10226-2
- Available with NPT Threads, subject to minimum quantities
- Available with lockshield (Fig. No. KBL25LS), subject to minimum quantities

Material Specifications

Description	Material
Body	Bronze CC491K
Ball	Brass CW617N (Chrome Plated)
Seat	PTFE
Stem	DZR Brass CW602N
Lever	Mild Steel (Chrome Plated)
Lever Cover	PVC

Dimensions

DN		d	L	H	D
Inches	MM				
½"	15	14	53	44	95
¾"	20	19	61	51	110
1"	25	24	71	55	110
1¼"	32	31	85	65	140
1½"	40	38	92	70	140
2"	50	49	114	83	160

All dimensions are nominal (indicative)
Actual dimensions may vary

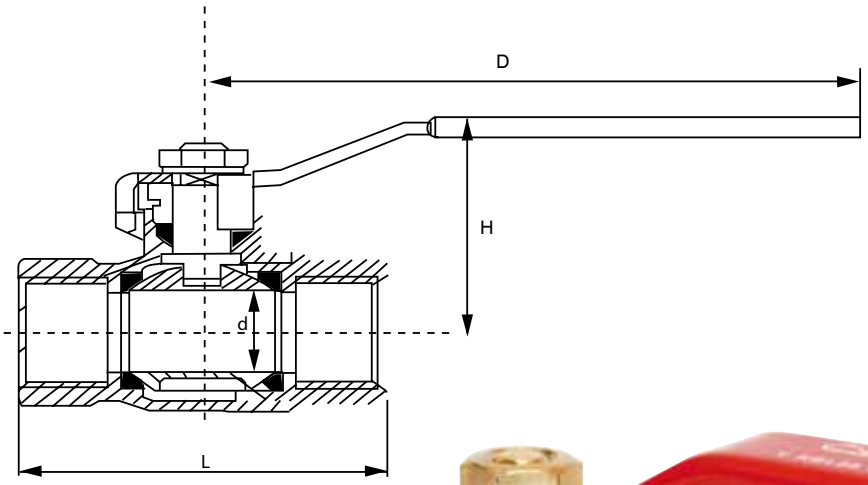

Fig. No. KBL25

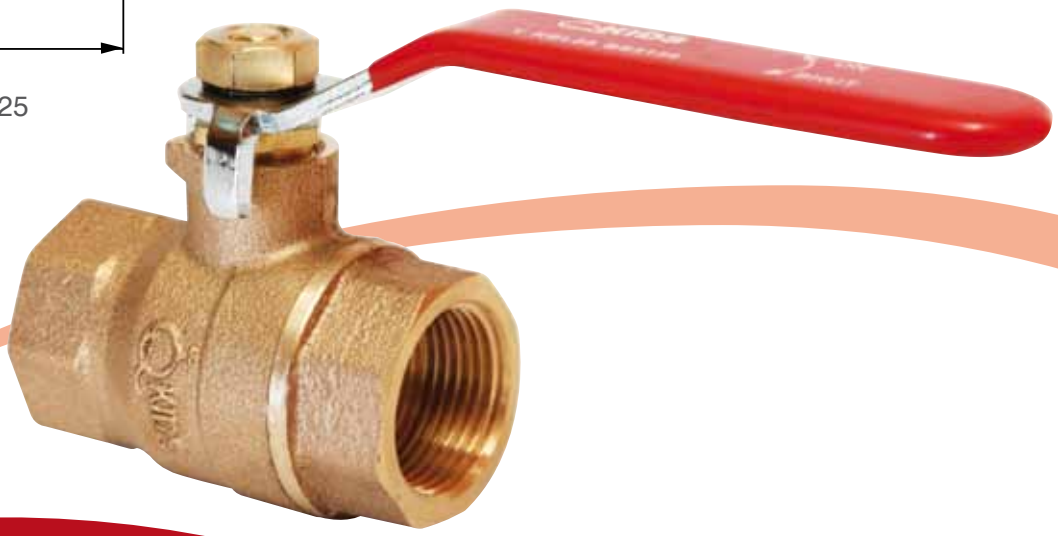

KIDS

Fig. KBL25EXT

Bronze Ball Valve

PN25

Notes:

- Pressure Rating: PN25
- Working Medium: Water, Oil, Steam
- Blow-out proof stem
- Full bore chrome plated ball
- PTFE seats and stem seals.
- BS21 Taper Threaded (ISO 7) / BS EN10226-2
- Available with NPT Threads, subject to minimum quantities

Dimensions

DN		L	H	D
Inches	MM			
½"	15	53	60	95
¾"	20	61	69	110
1"	25	71	73	110
1¼"	32	85	86.9	140
1½"	40	92	91.4	140
2"	50	114.5	106	161

All dimensions are nominal (indicative)
Actual dimensions may vary

Material Specifications

Description	Material
Seat	PTFE
Ball	Brass CW617N (Chrome Plated)
Body	Bronze CC491K
Stem	DZR Brass CW602N
Extension Stem	Brass CW617N
Extension Housing	Brass CW617N
Lever	Mild Steel (Chrome Plated)
Lever Cover	PVC

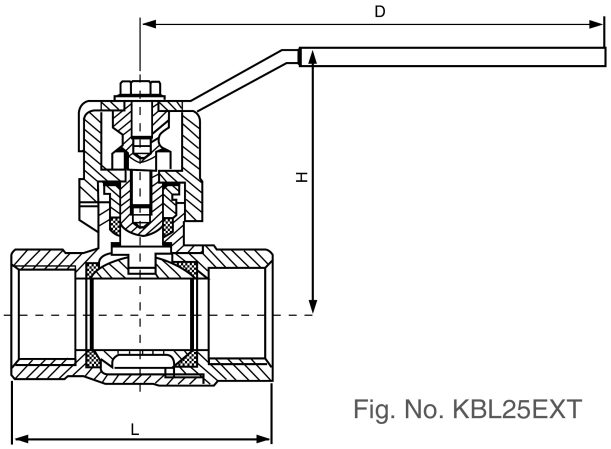

Fig. No. KBL25EXT

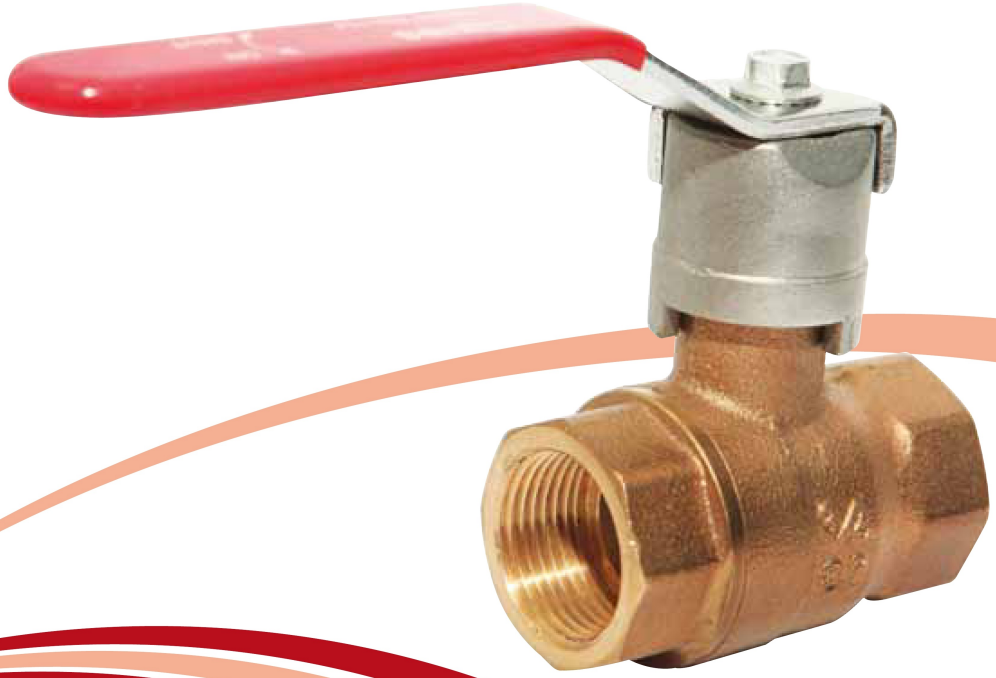

KIDS

Fig. KFDRV25

Bronze Fixed Orifice Double Regulating Valve

BS 7350 PN25

Notes:

- Designed to BS7350
- Pressure Rating: PN25
- Working Medium: Water, Oil, Steam
- Handwheel operated
- Numerical Indicator
- Inside screw non-rising handwheel
- Characterized regulating disc
- Integral fixed orifice
- Double Regulating(memory stop)
- Supplied with 2 test points
- BS21 Taper Threaded (ISO 7) / BS EN10226-2
- Available with NPT Threads, subject to minimum quantities
- For ½" - ¾" there is a PTFE o-ring on the disc

Material Specifications

Description	Material
Body	Bronze CC491K
Bonnet (½" -1¼")	DZR Brass CW602N
Bonnet (1½" - 2")	Bronze CC491K
Stem	DZR Brass CW602N
Disc	DZR Brass CW602N
Handwheel	Plastic
Orifice Insert	DZR Brass CW602N
Press. Test Points	DZR Brass CW602N

Dimensions

DN		L	H	C
Inches	MM			
½"	15	87	105	46
¾"	20	96	106	51
1"	25	100	127	56
1¼"	32	114	128	57
1½"	40	125	143	61
2"	50	146	144	75

All dimensions are nominal (indicative)
Actual dimensions may vary

- **Superior to variable orifice DRV due to higher accuracy from integral fixed orifice**
- **Flow reading across fixed orifice +/- 5%**
- **Valve must be installed fully in accordance with instructions.**

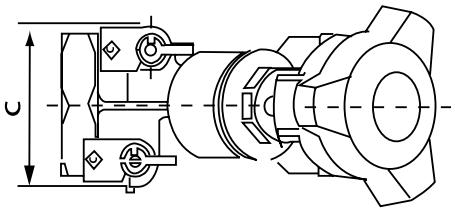

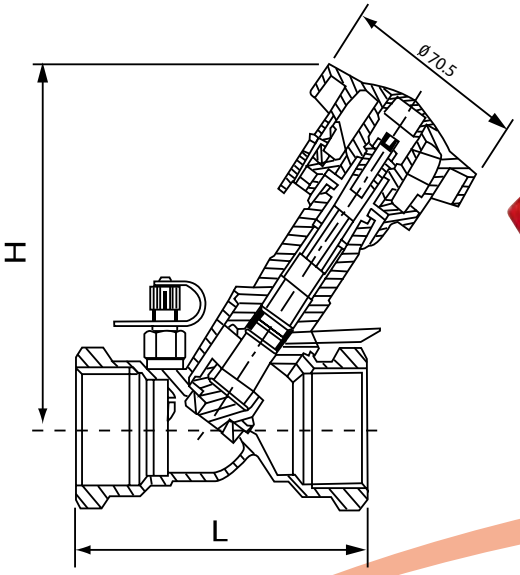

Fig. No. KFDRV25

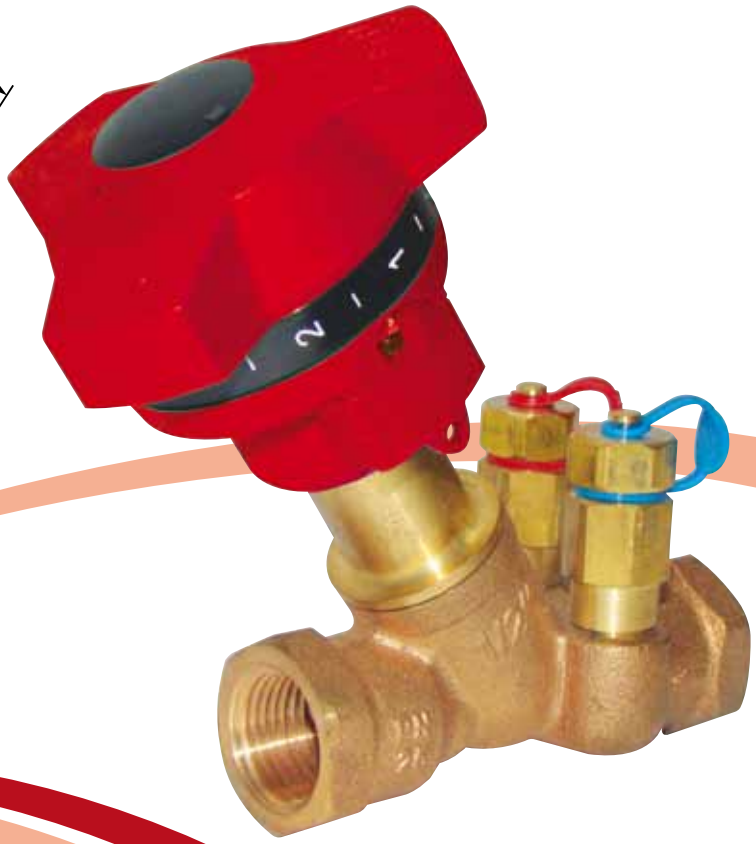

KIDS

Fig. KIDRV16FO

Ductile Iron Fixed Orifice Double Regulating Valve

BS7350 PN16

Notes:

- Designed to BS7350
- Pressure Rating: PN16
- Working Medium: Water, Oil, Steam
- Flanged to BS4504 / BS EN1092-2
- Non-Rising Stem
- EPDM Coated Disc
- Bolted Bonnet
- DZR Brass orifice insert
- Double Regulating (Memory Stop) device
- Supplied with 2 DZR (CW602N) Test points
- Flow Data available
- Other flange standards available upon request
- Other PN pressure ratings available upon request
- ANSI standards available upon request.

Material Specifications

Description	Material
Body	EN-JS1050
Disc	EN-JS1050 + EPDM
Stem	BS970 410S21
Bonnet	EN-JS1050
Handwheel	EN-JS1050
Plugs	Steel
Orifice Insert	EN 12165 CW602N

- **Superior to variable orifice DRV due to higher accuracy from integral fixed orifice**
- **Flow reading across fixed orifice +/- 5%**
- **Valve must be installed fully in accordance with instructions.**

Dimensions

DN	H	L	ø	L1	B
65	265	290	200	310	19
80	370	310	200	320	19
100	310	350	240	360	19
125	340	400	290	415	19
150	350	480	290	445	19
200	537	600	350	620	20
250	591	730	420	720	22
300	690	850	420	875	24.50

All dimensions are nominal (indicative)
Actual dimensions may vary

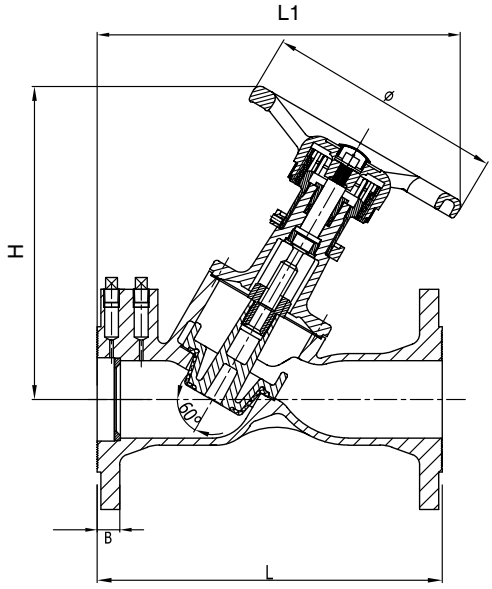

Fig. No. KIDRV16FO

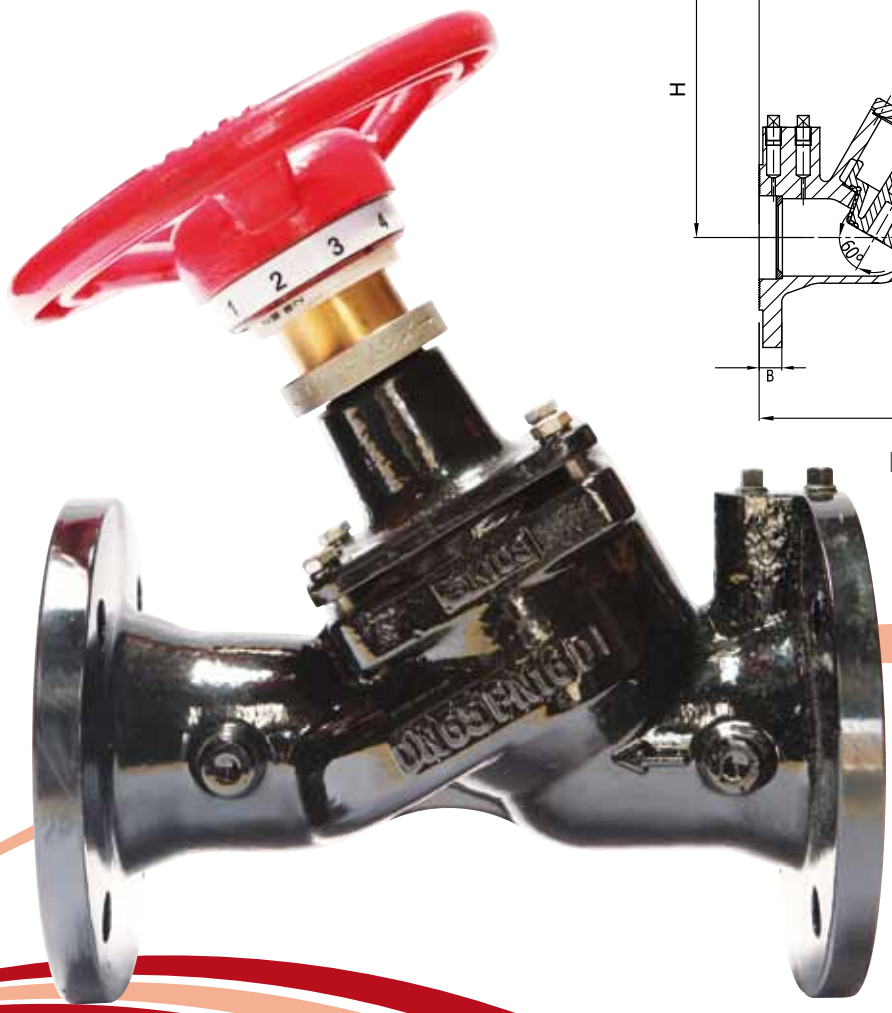

KIDS

Fig. KIDRV25FO

Ductile Iron Fixed Orifice Double Regulating Valve

BS7350 PN25

Notes:

- Designed to BS7350
- Pressure Rating: PN25
- Working Medium: Water, Oil, Steam
- Flanged to BS4504 / BS EN1092-2
- Non-Rising Stem
- EPDM Coated Disc
- Bolted Bonnet
- DZR Brass orifice insert
- Double Regulating (Memory Stop) device
- Supplied with 2 DZR (CW602N) Test points
- Flow Data available
- Other flange standards available upon request
- ANSI standards available upon request.

Material Specifications

Description	Material
Body	EN-JS1050
Disc	EN-JS1050 + EPDM
Stem	BS970 410S21
Bonnet	EN-JS1050
Handwheel	EN-JS1050
Plugs	Steel
Orifice Insert	EN 12165 CW602N

- **Superior to variable orifice DRV due to higher accuracy from integral fixed orifice**
- **Flow reading across fixed orifice +/- 5%**
- **Valve must be installed fully in accordance with instructions.**

Dimensions

DN	H	L	ø	L1	B
65	265	290	200	310	19
80	370	310	200	320	19
100	310	350	240	360	19
125	340	400	290	415	19
150	350	480	290	445	20
200	537	600	350	620	22
250	591	730	420	720	24.5
300	690	850	420	875	27.5
350	730	980	420	980	30
400	780	1100	420	1080	32
450	820	1200	420	1150	34.5

All dimensions are nominal (indicative)
Actual dimensions may vary

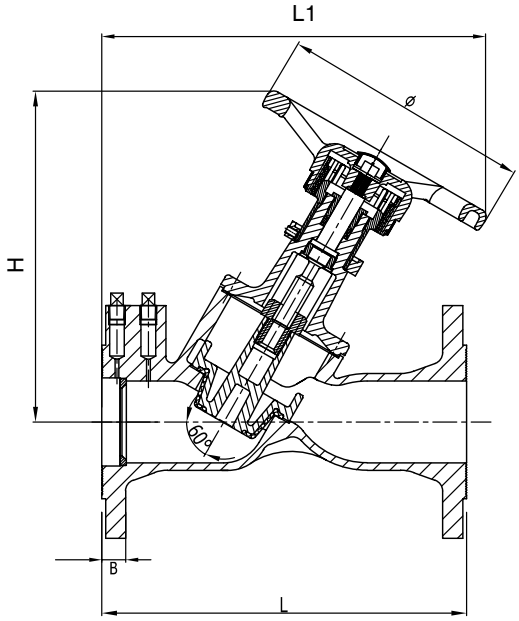

Fig. No. KIDRV25FO

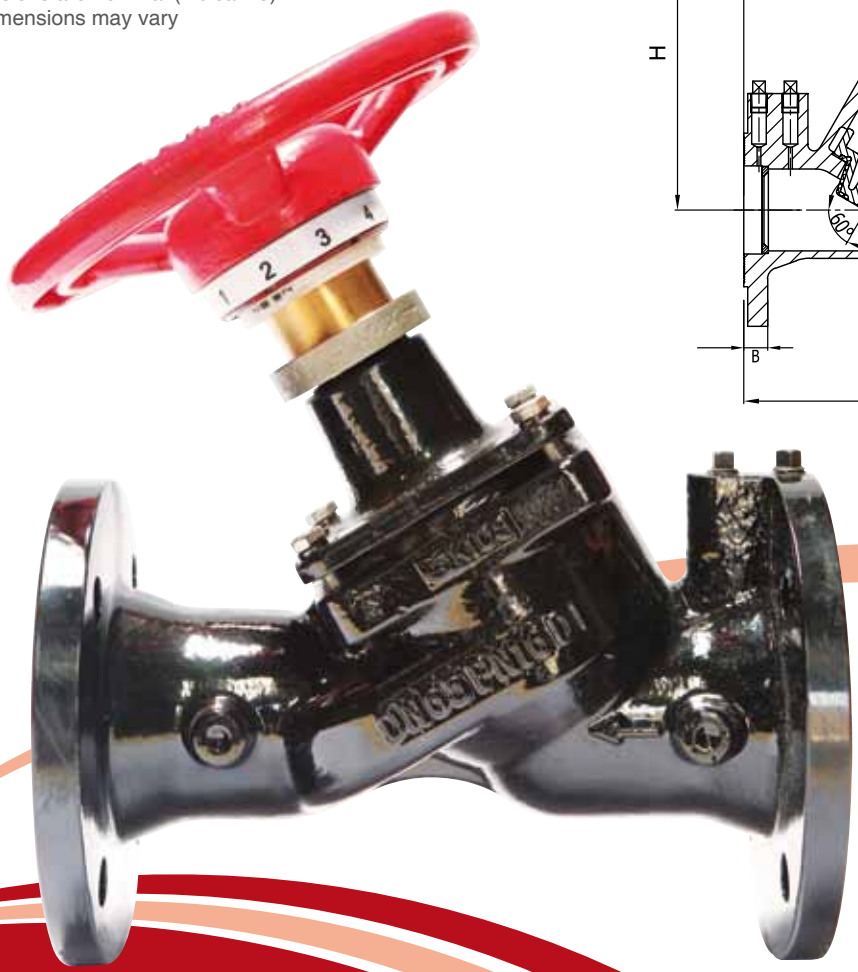

KIDS

Fig. KBFV16W

Ductile Iron Butterfly Valve
Semi Lugged Type, Lever Operated
BS EN593 PN16

Dimensions - For dimension drawing, please refer next page

DN	A	B	C	D	E	F	H	I	K	L	P
65	89	174	32	18	145	45	65	50	7	45	230
80	95	181	32	18	160	22.5	65	50	7	45	230
100	114	200	32	18	180	22.5	90	70	9.5	52	260
125	127	213	32	18	210	22.5	90	70	9.5	54	260
150	139	225	32	22	240	22.5	90	70	9.5	56	260
200	177	260	38	22	295	15	125	102	11.5	60	360

All dimensions are nominal (indicative)
Actual dimensions may vary

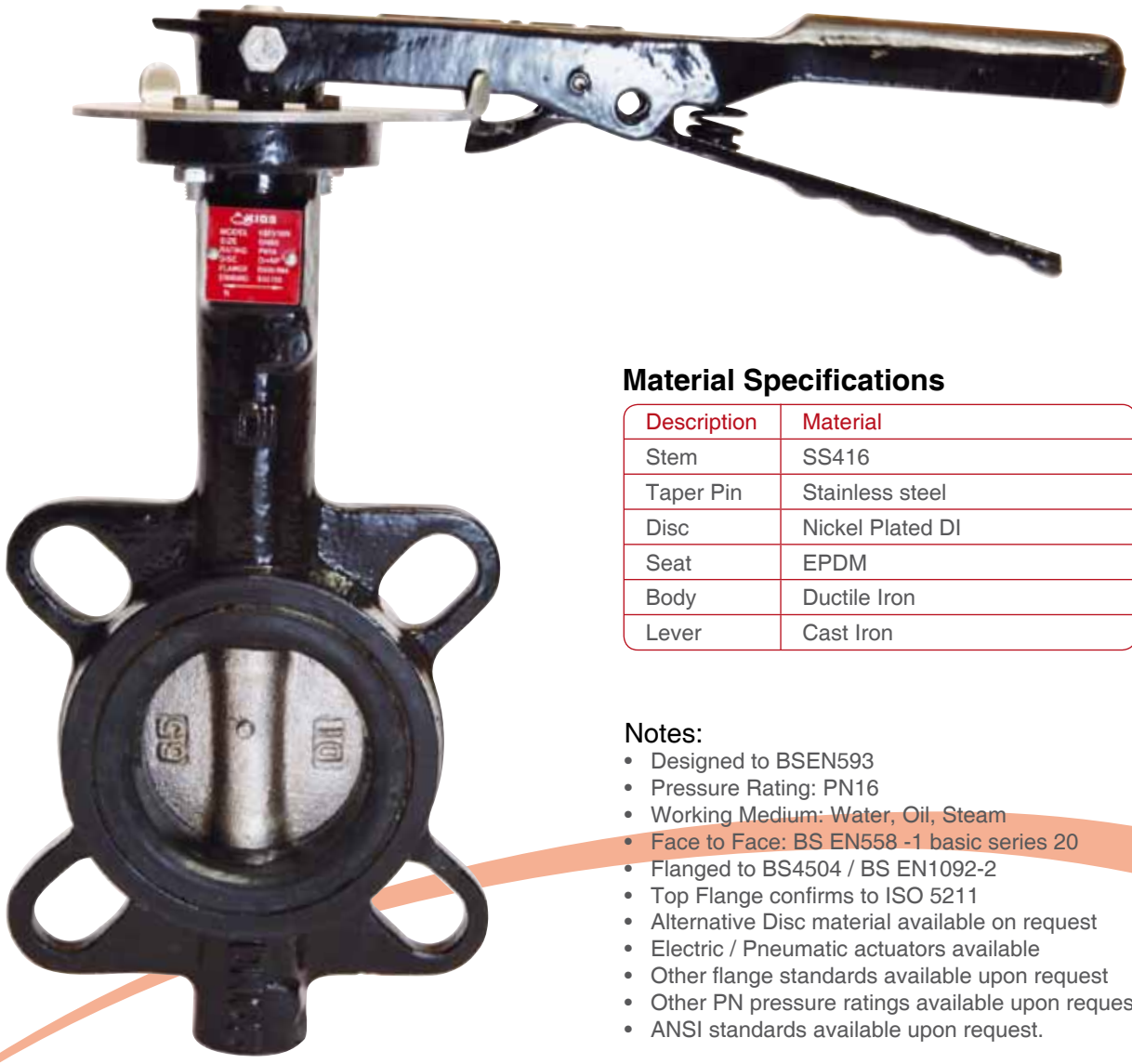

Material Specifications

Description	Material
Stem	SS416
Taper Pin	Stainless steel
Disc	Nickel Plated DI
Seat	EPDM
Body	Ductile Iron
Lever	Cast Iron

Notes:

- Designed to BSEN593
- Pressure Rating: PN16
- Working Medium: Water, Oil, Steam
- Face to Face: BS EN558 -1 basic series 20
- Flanged to BS4504 / BS EN1092-2
- Top Flange confirms to ISO 5211
- Alternative Disc material available on request
- Electric / Pneumatic actuators available
- Other flange standards available upon request
- Other PN pressure ratings available upon request
- ANSI standards available upon request.

KIDS

Fig. KBFV16W

Ductile Iron Butterfly Valve
Semi Lugged Type, Lever Operated
BS EN593 PN16

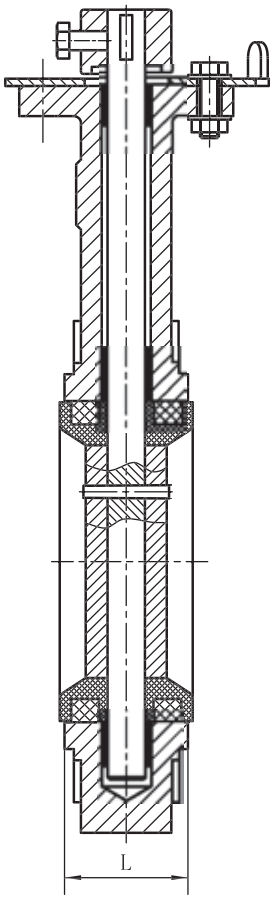

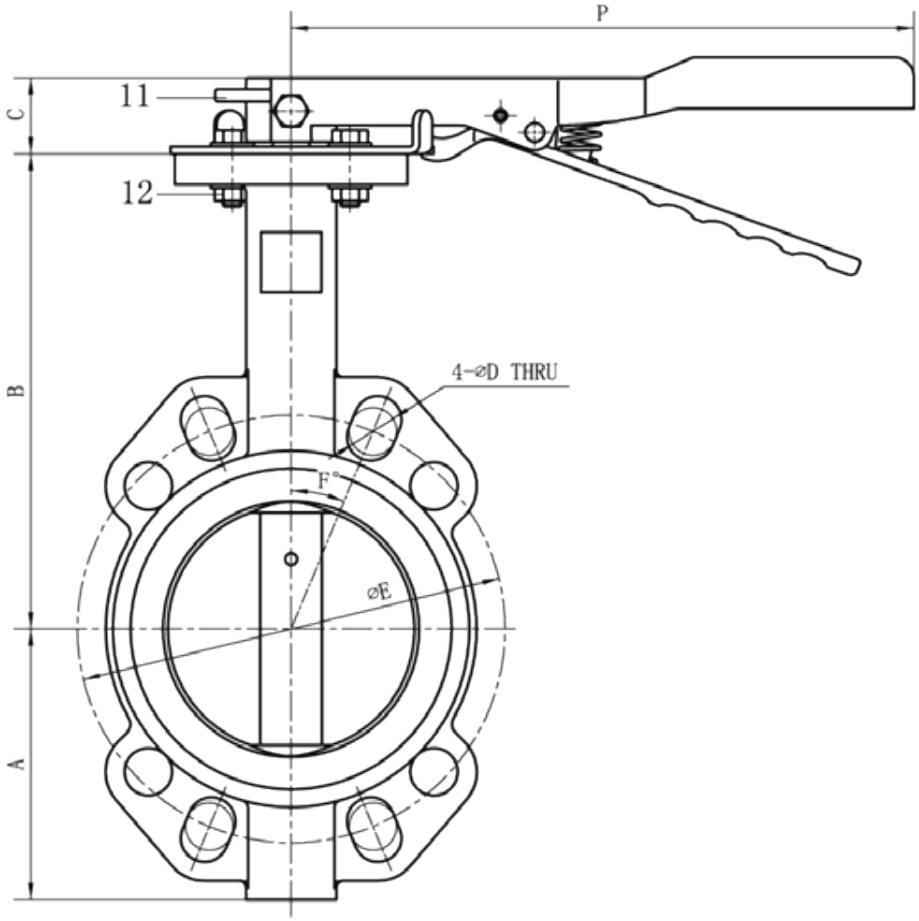

Disassembly Lever and Locking Plate

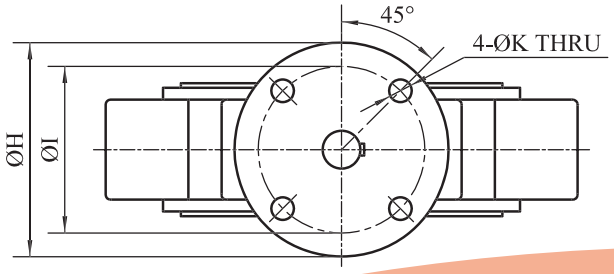

Fig. No. KBFV16W

KIDS

Fig. KBFV16WG

Ductile Iron Butterfly Valve
Semi Lugged Type, Gear Operated
BS EN593 PN16

Dimensions - For dimension drawing, please refer next page

DN	A	B	C	D	E	F	G	H	K	O	P	R	L
250	203	292	355	26	15	41	235	300	63	125	102	11.5	66
300	242	337	410	26	15	42	226	300	81	125	102	11.5	77
350	277	368	470	26	11.25	42	226	300	81	140	102	11.5	77
400	308	400	525	30	11.25	48	217	360	95	210	165	22	102
450	342	422	585	30	9	48	217	360	95	210	165	22	114
500	374	479	650	33	9	115	320	360	185	210	165	22	130
600	459	562	770	36	9	120	335	360	185	210	165	22	152

All dimensions are nominal (indicative)
Actual dimensions may vary

Material Specifications

Description	Material
Stem	SS416
Seat	EPDM
Disc	DI Nickel Plated
Body	Ductile Iron
Taper Pin	Stainless steel

Notes:

- Designed to BSEN593
- Pressure Rating: PN16
- Working Medium: Water, Oil, Steam
- Face to Face: BS EN558 -1 basic series 20
- Flanged to BS4504 / BS EN1092-2
- Top Flange confirms to ISO 5211
- Optional chain wheel operator available
- Electric / Pneumatic actuators available
- Alternative Disc material available on request
- Other flange standards available upon request
- Other PN pressure ratings available upon request
- ANSI standards available upon request.

KIDS

Fig. KBFV16WG

Ductile Iron Butterfly Valve
Semi Lugged Type, Gear Operated
BS EN593 PN16

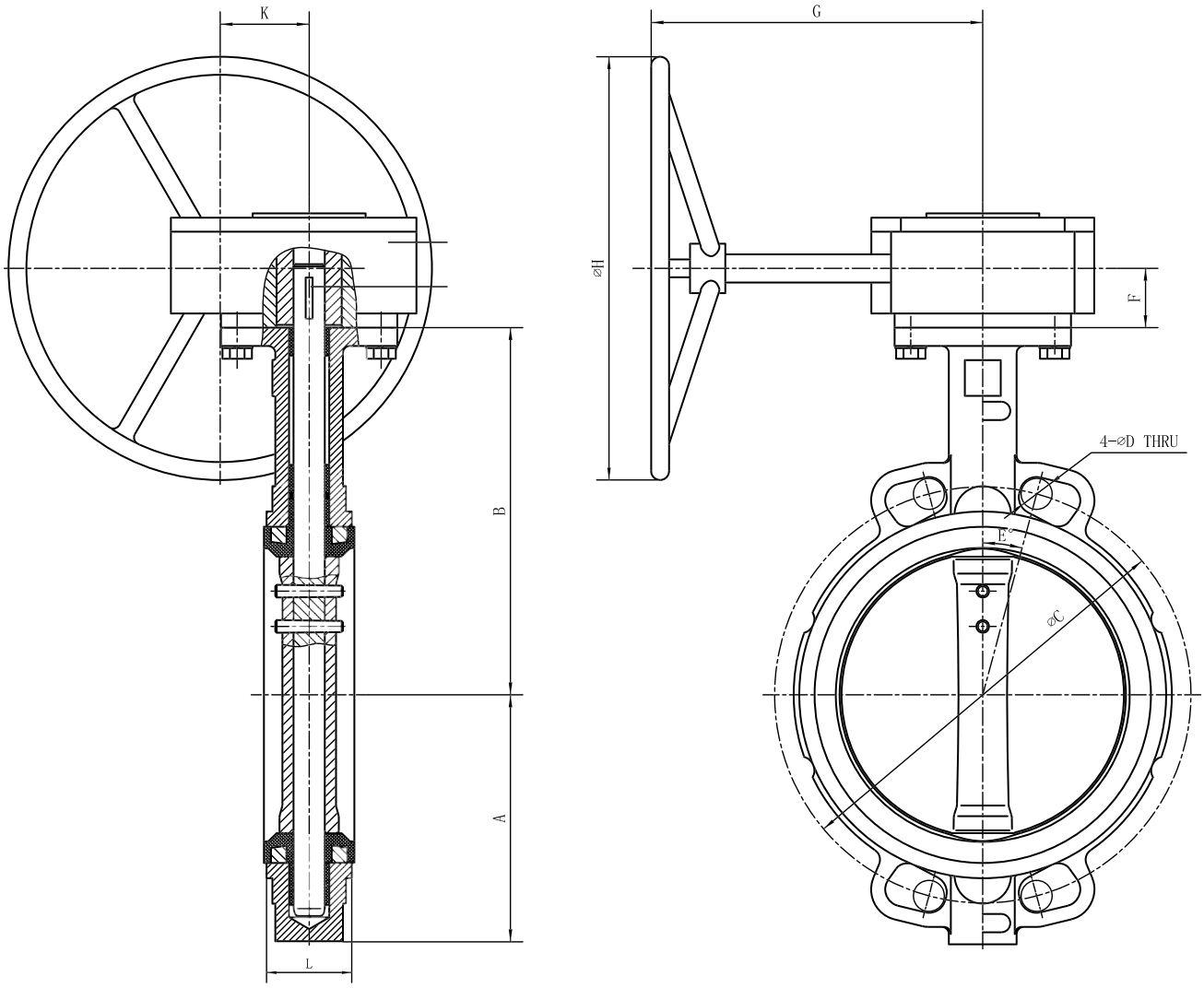

Disassembly Gear Operator

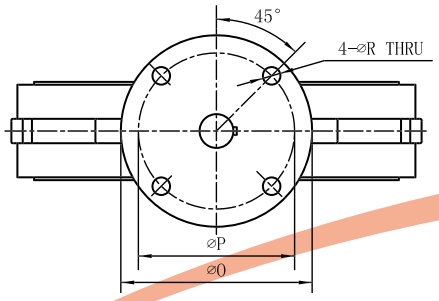

Fig. KBFV16WG

KIDS

Fig. KBFV25WG

Metal Seated WCB Butterfly Valve
Semi Lugged Type, Gear Operated
BS EN593 PN25

Dimensions

DN	D2	D1	n-ød(M)	L	H	H1	A	B	C	D0
65	118	145	4-ø18	46	370	122	53	50	106	150
80	132	160	4-ø18	64	380	132	53	50	106	150
100	156	190	4-ø22	64	410	152	53	50	106	180
125	184	220	4-ø26	70	445	167	53	50	106	180
150	211	250	4-ø26	76	520	187	84	80	143	220
200	274	310	4-M24	89	594	222	84	80	143	280
250	330	370	4-M27	114	674	267	113	108	200	280
300	389	430	4-M27	114	805	302	113	108	200	320
350	448	490	4-M30	127	870	332	150	144	330	320
400	503	550	4-M33	140	977	382	150	144	330	350
450	548	600	4-M33	152	1002	397	150	144	330	350
500	609	660	4-M33	152	1043	442	150	144	330	350
600	720	770	4-M36	178	1255	485	193	184	360	450

All dimensions are normal (indicative)
Actual dimensions may vary

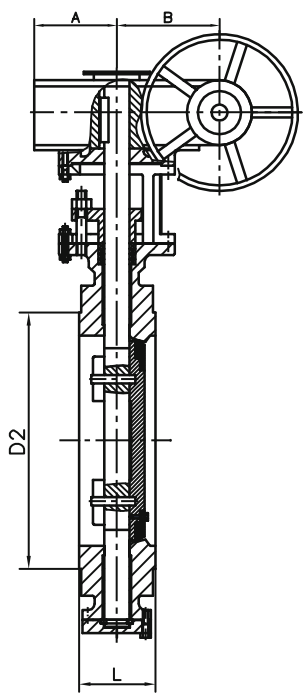

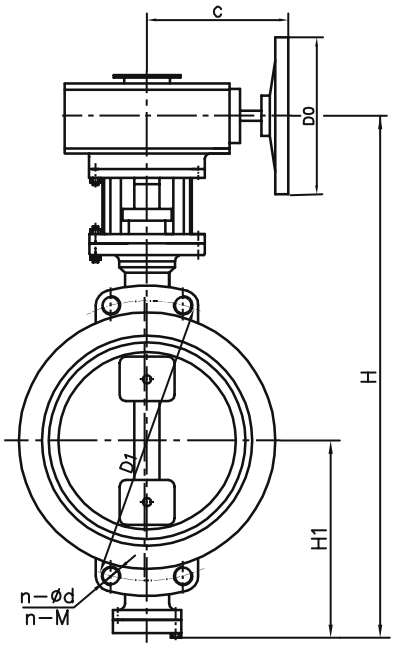

Material Specifications

Description	Material
Body	A216 WCB
Cover	ASTM A105
Seat Ring	SS304 + Graphite
Disc	A216 WCB
Pin	A193 B7
Stem	SS420
Stem Packing	Graphite
Gland	A216WCB

Notes:

- Designed to BSEN593
- Pressure Rating: PN25
- Working Medium: Water, Oil, Steam
- Face to Face: BS EN558 -1 basic series 16
- Flanged to BS4504 / BS EN1092-1
- Metal Seated
- Optional chain wheel operator available
- Electric / Pneumatic actuators available
- Other flange standards available upon request
- ANSI standards available upon request

KIDS

Fig. KBFV16L

Ductile Iron Butterfly Valve
Fully Lugged Type, Lever Operated
BS EN593 PN16

Dimensions - For dimension drawing, please refer next page

DN	A	B	C	E	H	I	K	M	N	L	P
65	89	174	32	145	65	50	7	M16	4	45	230
80	95	181	32	160	65	50	7	M16	8	45	230
100	114	200	32	180	90	70	9.5	M16	8	52	260
125	127	213	32	210	90	70	9.5	M16	8	54	260
150	139	225	32	240	90	70	9.5	M20	8	56	260
200	177	260	38	295	125	102	11.5	M20	12	60	360

All dimensions are nominal (indicative)
Actual dimensions may vary

Material Specifications

Description	Material
Stem	SS416
Taper Pin	Stainless steel
Disc	Nickel Plated DI
Seat	EPDM
Body	Ductile Iron
Lever	Cast Iron

Notes:

- Designed to BSEN593
- Pressure Rating: PN16
- Working Medium: Water, Oil, Steam
- Face to Face: BS EN558 -1 basic series 20
- Flanged to BS4504 / BS EN1092-2
- Top Flange confirms to ISO 5211
- Alternative Disc material available on request
- Electric / Pneumatic actuators available
- Other flange standards available upon request
- Other PN pressure ratings available upon request
- ANSI standards available upon request.

KIDS

Fig. KBFV16L

Ductile Iron Butterfly Valve
Fully Lugged Type, Lever Operated
BS EN593 PN16

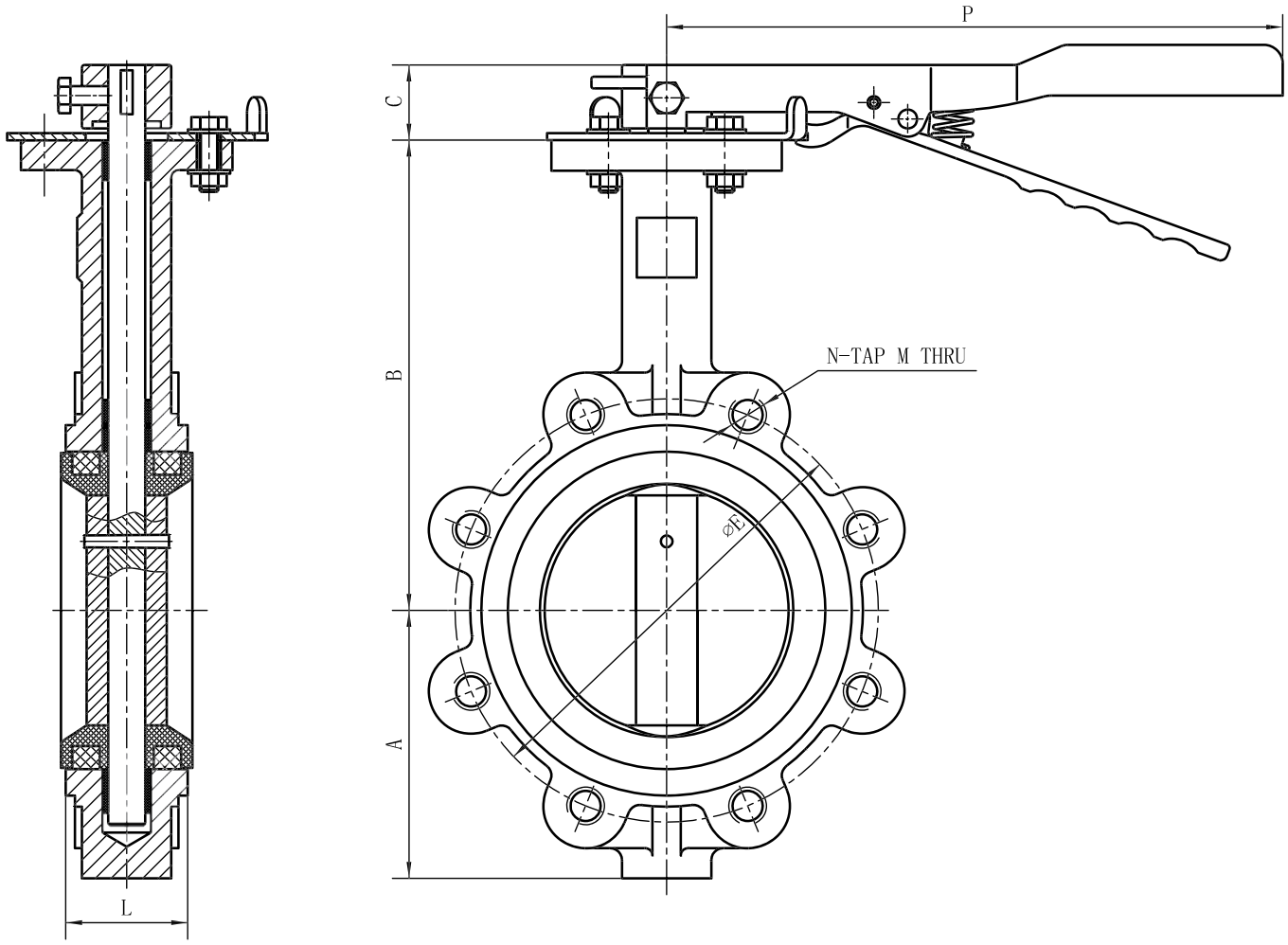

Disassembly Lever and Locking Plate

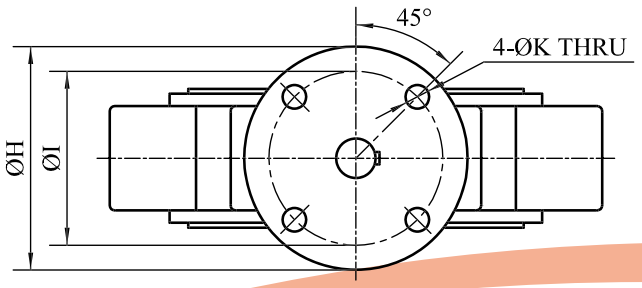

Fig. KBFV16L

KIDS

Fig. KBFV16LG

Ductile Iron Butterfly Valve
Fully Lugged Type, Gear Operated
BS EN593 PN16

Dimensions - For dimension drawing, please refer next page

DN	A	B	C	D	E	F	N-TAP M	H	J	K	P	L
250	203	292	355	125	102	11.5	12-M24	41	235	300	63	66
300	242	337	410	125	102	11.5	12-M24	42	226	300	81	77
350	277	368	470	140	102	11.5	16-M24	42	226	300	81	77
400	308	400	525	210	165	22	16-M27	48	217	360	95	102
450	342	422	585	210	165	22	20-M27	48	217	360	95	114
500	374	479	650	210	165	22	20-M30	115	320	360	185	130
600	459	562	770	210	165	22	20-M33	120	335	360	185	152

All dimensions are nominal (indicative)
Actual dimensions may vary

Material Specifications

Description	Material
Stem	SS416
Seat	EPDM
Disc	DI Nickel Plated
Body	Ductile Iron
Taper Pin	Stainless steel

Notes:

- Designed to BSEN593
- Pressure Rating: PN16
- Working Medium: Water, Oil, Steam
- Face to Face: BS EN558 -1 basic series 20
- Flanged to BS4504 / BS EN1092-2
- Top Flange confirms to ISO 5211
- Optional chain wheel operator available
- Electric / Pneumatic actuators available
- Alternative Disc material available on request
- Other flange standards available upon request
- Other PN pressure ratings available upon request
- ANSI standards available upon request.

KIDS

Fig. KBFV16LG

Ductile Iron Butterfly Valve
Fully Lugged Type, Gear Operated
BS EN593 PN16

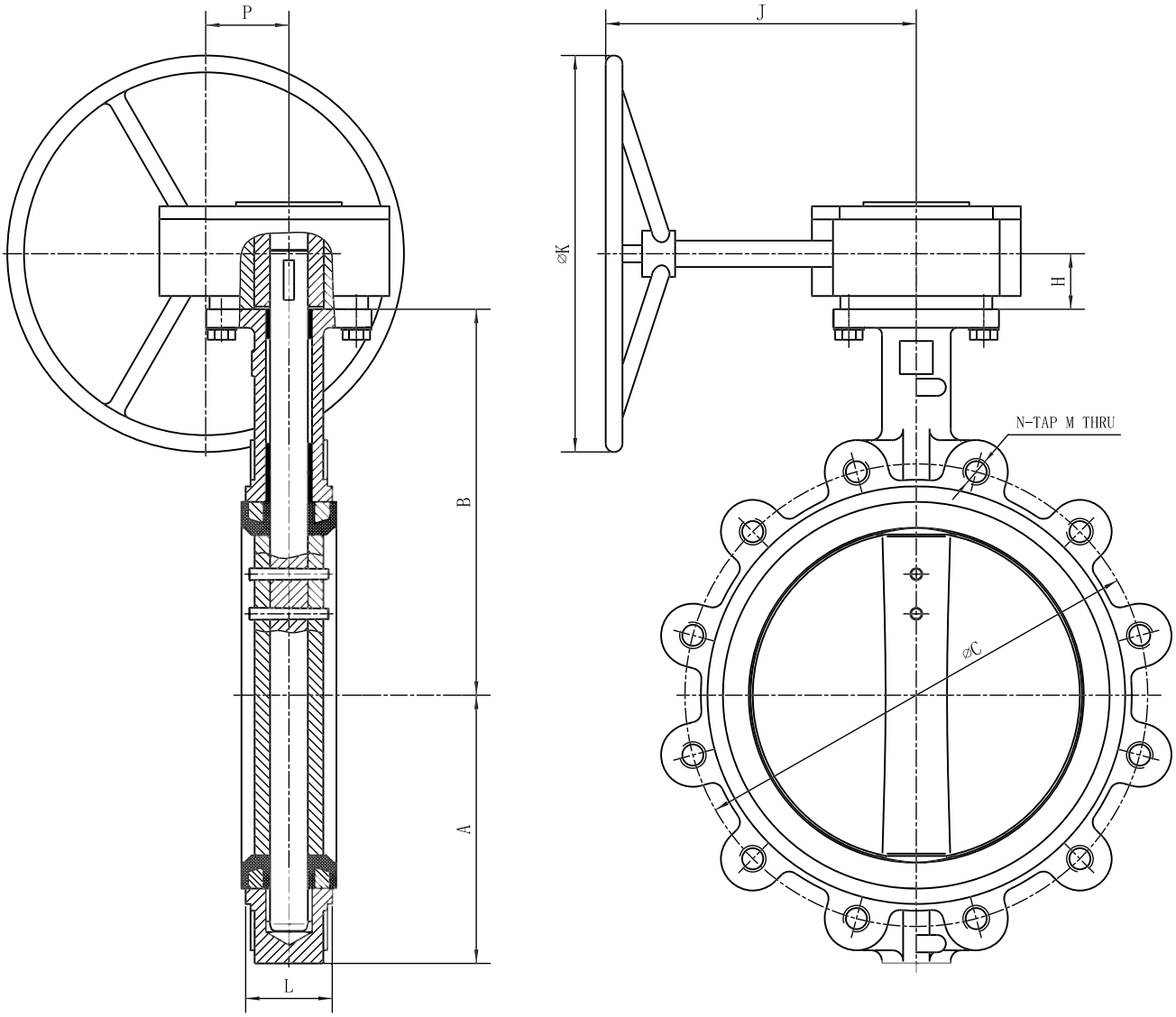

Disassembly Gear Operator

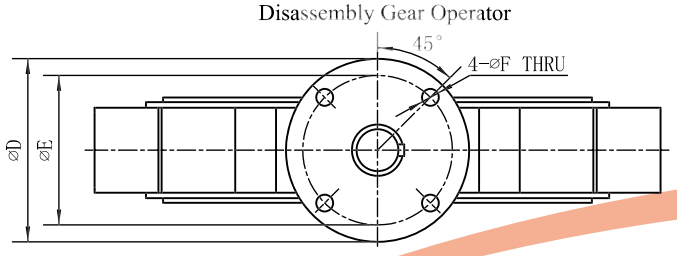

Fig. KBFV16LG

KIDS

Fig. KBFV25LG

Metal Seated WCB Butterfly Valve
Lugged Type, Gear Operated
BS EN593 PN25

Dimensions

DN	D2	D1	n-ød(M)	L	H	H1	A	B	C	D0
65	118	145	8-M16	46	370	122	53	50	106	150
80	132	160	8-M16	64	380	132	53	50	106	150
100	156	190	8-M20	64	410	152	53	50	106	180
125	184	220	8-M24	70	445	167	53	50	106	180
150	211	250	8-M24	76	520	187	84	80	143	220
200	274	310	12-M24	89	594	222	84	80	143	280
250	330	370	12-M27	114	674	267	113	108	200	280
300	389	430	16-M27	114	805	302	113	108	200	320
350	448	490	16-M30	127	870	332	150	144	330	320
400	503	550	16-M33	140	977	382	150	144	330	350
450	548	600	20-M33	152	1002	397	150	144	330	350
500	609	660	20-M33	152	1043	442	150	144	330	350
600	720	770	20-M36	178	1255	485	193	184	360	450

All dimensions are normal (indicative)
Actual dimensions may vary

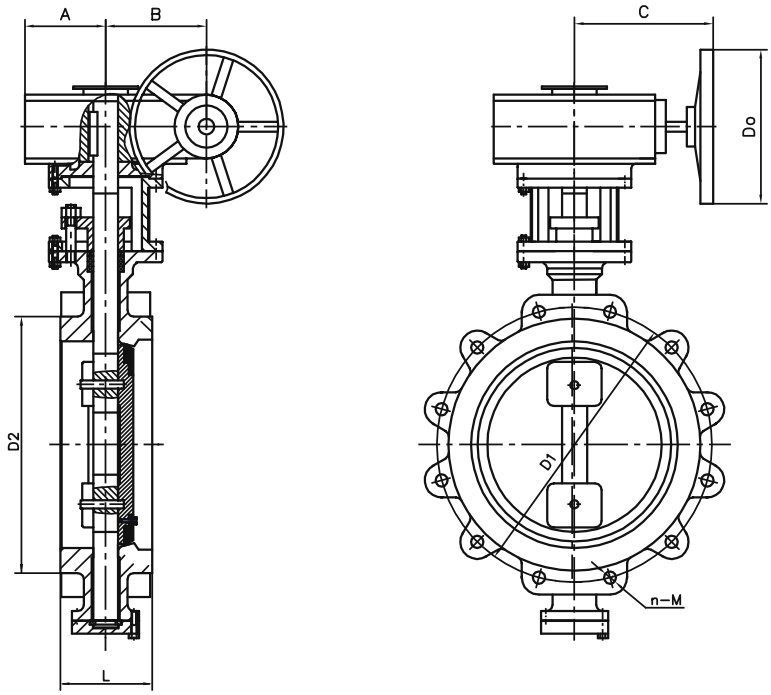

Material Specifications

Description	Material
Body	A216 WCB
Cover	ASTM A105
Seat Ring	SS304 + Graphite
Disc	A216 WCB
Pin	A193 B7
Stem	SS420
Stem Packing	Graphite
Gland	A216WCB

Notes:

- Designed to BSEN593
- Pressure Rating: PN25
- Working Medium: Water, Oil, Steam
- Face to Face: BS EN558 -1 basic series 16
- Flanged to BS4504 / BS EN1092-1
- Metal Seated
- Optional chain wheel operator available
- Electric / Pneumatic actuators available
- Other flange standards available upon request
- ANSI standards available upon request

KIDS

Fig. KBFV25LLR

Ductile Iron Butterfly Valve
Fully Lugged Type, Lever Operated
BS EN593 PN25

Material Specifications

Description	Material
Stem	SS431
Taper Pin	Stainless steel
Disc	Ductile Iron
Seat	EPDM
Body	Ductile Iron
Lever	Malleable Iron

Dimensions

DN	A	B	Bolt Size	No. of Bolts	L	L1	PCD
65	175	86	M16	8	44.5	49.1	ø145
80	181	94	M16	8	44.5	49.1	ø160
100	200	112.4	M20	8	51	56	ø190
125	213	130	M24	8	54.5	59.1	ø220

All dimensions are nominal (indicative)
Actual dimensions may vary

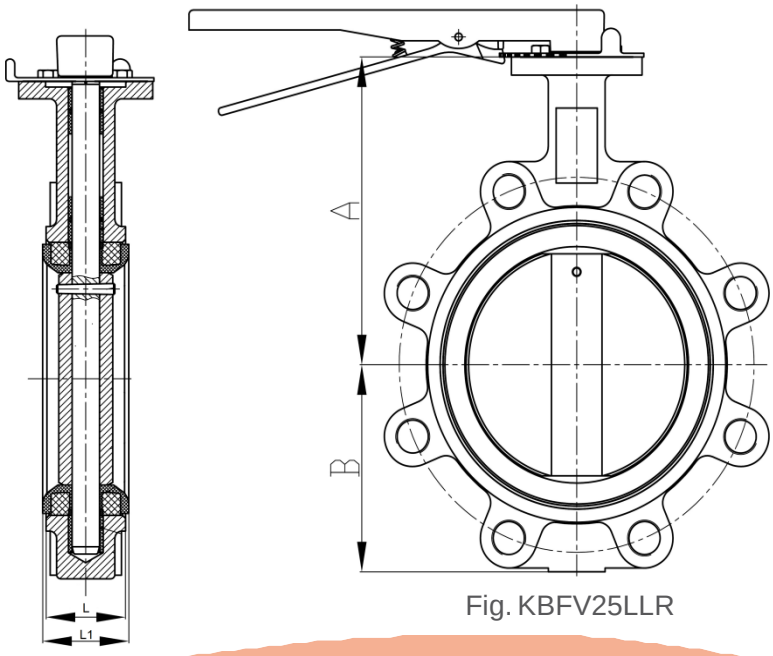

Fig. KBFV25LLR

Notes:

- Designed to BSEN593
- Pressure Rating: PN25
- Working Medium: Water, Oil, Steam
- Flanged to BS4504 / BS EN1092-2
- Top Flange confirms to ISO 5211
- Alternative Disc material available on request
- Electric / Pneumatic actuators available
- Other flange standards available upon request
- Other PN pressure ratings available upon request
- ANSI standards available upon request.

KIDS

Fig. KBFV25LGR

Ductile Iron Butterfly Valve
Fully Lugged Type, Gear Operated
BS EN593 PN25

Dimensions

DN	A	B	L	L1	L2	H	N- M	PCD	ØD
150	226	149.8	54.5	59.1	205	65	8-M24	Ø250	150
200	260	190	59.6	64.1	295	79	12-M24	Ø310	285
250	292	225	67	71.8	295	79	12-M27	Ø370	285
300	337	255	75.5	81	292	80	16-M27	Ø430	285

All dimensions are nominal (indicative)
Actual dimensions may vary

Material Specifications

Description	Material
Stem	SS431
Seat	EPDM
Disc	Ductile Iron
Body	Ductile Iron
Gear	Cast Iron
Taper Pin	Stainless steel

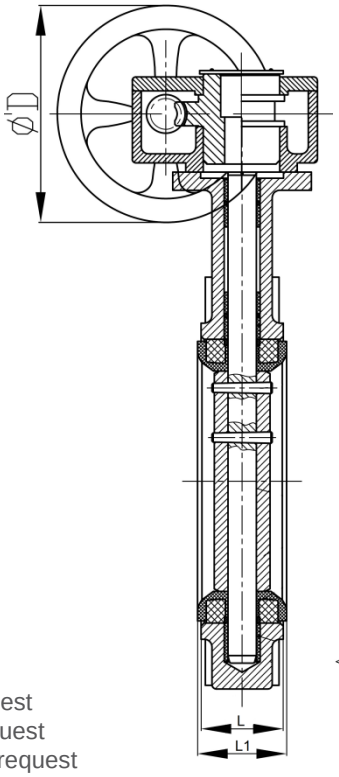

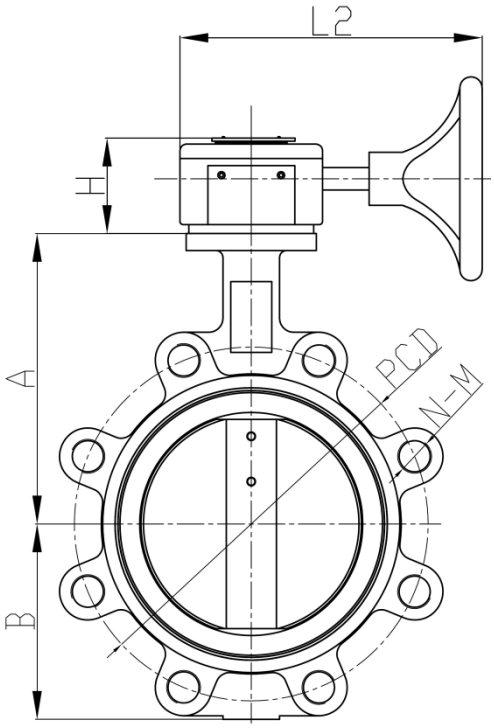

Notes:
- Designed to BSEN593
- Pressure Rating: PN25
- Working Medium: Water, Oil, Steam
- Flanged to BS4504 / BS EN1092-2
- Top Flange confirms to ISO 5211
- Optional chain wheel operator available
- Electric / Pneumatic actuators available
- Alternative Disc material available on request
- Other flange standards available upon request
- Other PN pressure ratings available upon request
- ANSI standards available upon request.

KIDS

Fig. KBFV16DF

Ductile Iron Double Flanged Butterfly Valve, Gear Operated BS EN593 PN16

Dimensions - For dimension drawing, please refer next page

DN	A	B	C	D	E	F	N-øG	H	J	8-øK	L	T
700	515	565	72	55	910	840	24-37	300	254	8-ø18	292	40
800	565	640	72	55	1025	950	24-41	300	254	8-ø18	318	44
900	605	680	77	75	1125	1050	28-41	300	254	8-ø18	330	46
1000	685	760	85	85	1255	1170	28-44	300	254	8-ø18	410	49
1200	790	880	150	92	1485	1390	32-50	350	298	8-ø22	470	54

All dimensions are nominal (indicative)
Actual dimensions may vary

Notes:

- Designed to BSEN593
- Pressure Rating: PN16
- Working Medium: Water, Oil, Steam
- Face to Face: BS EN558 -1 basic series 13
- Flanged to BS EN1092-2 / BS4504
- Top Flange confirms to ISO 5211
- Gear Operation as standard
- Optional chain wheel operator available
- Electric / Pneumatic actuators available
- Alternative Disc material available on request
- Other flange standards available upon request
- Other PN pressure ratings available upon request
- ANSI standards available upon request.
- 65mm-600 mm available upon request (subject to minimum quantities)
- Higher sizes available upon request.

Material Specifications

Description	Material
Body	Ductile Iron
Stem	SS431
Disc	DI Nickel Plated
Pin	Stainless Steel
Seat	EPDM

QKIDS

Fig. KBFV16DF

Ductile Iron Double Flanged
Butterfly Valve, Gear Operated
BS EN593 PN16

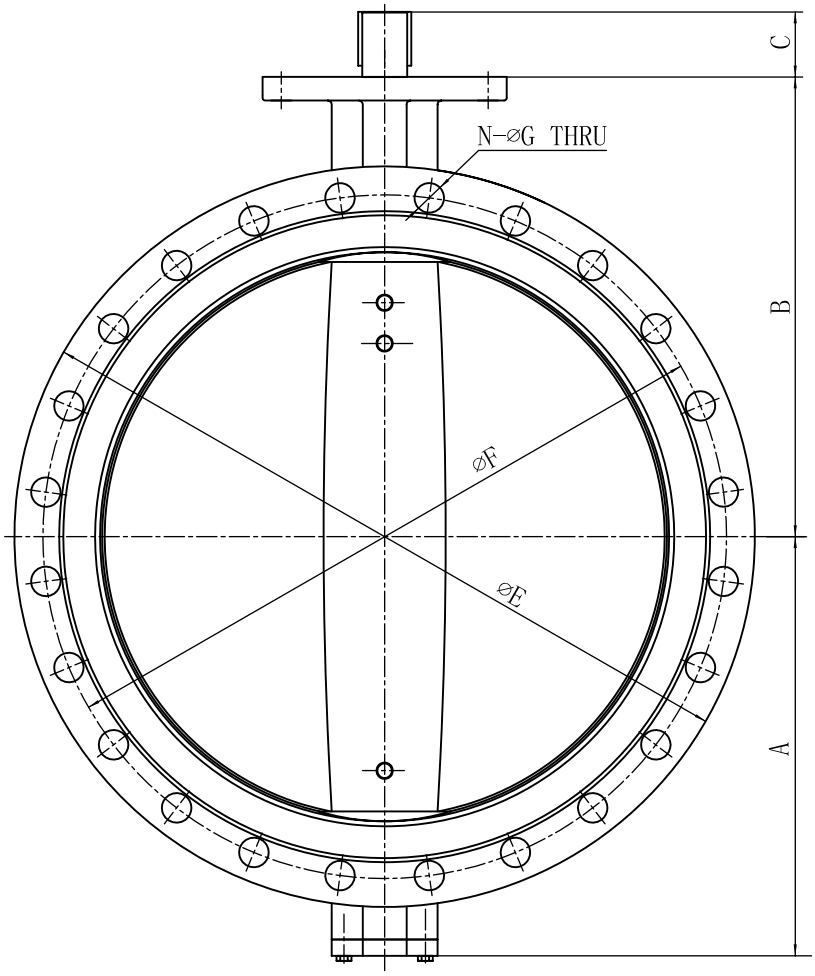

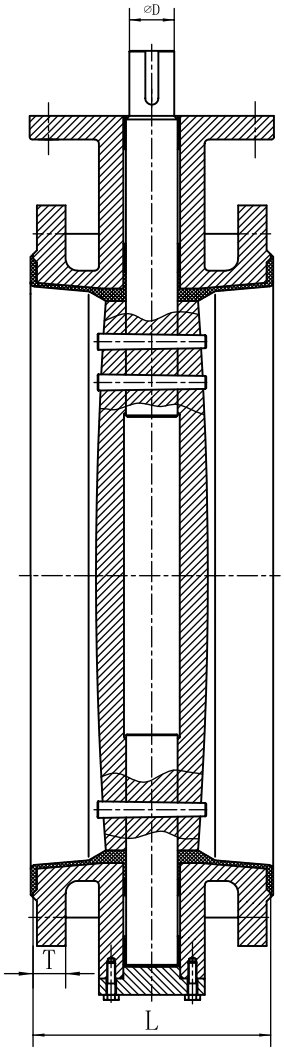

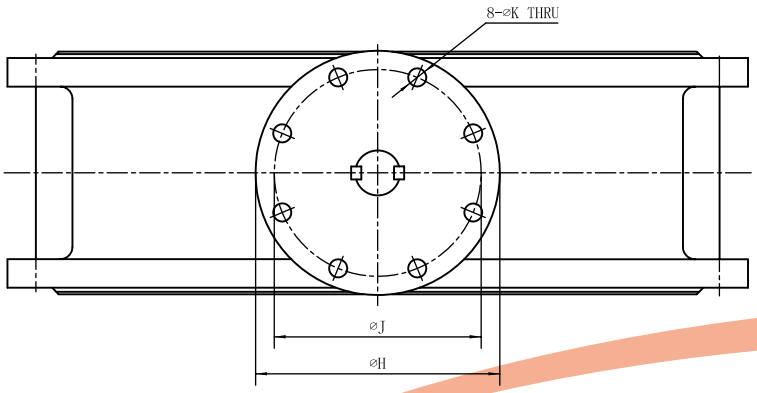

Fig. KBFV16DF

KIDS

Fig. KBFV16DE

Double Eccentric Butterfly Valve – Double Flanges

EN593 Series 13

PN16

SPECIFICATION

- Designed to EN593 Series 13
- Pressure Rating: PN16
- Temperature range: -10 to 120°C
- Working Medium: Water
- Gear operator for all sizes
- Flanged to BS EN1092-2 PN16

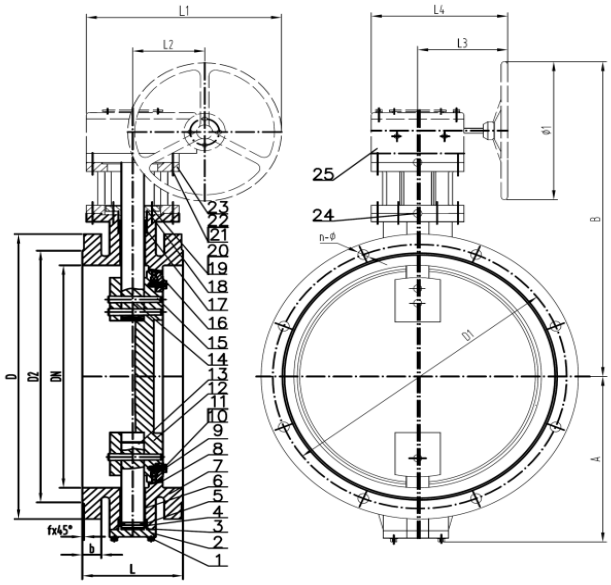

DN100–DN250

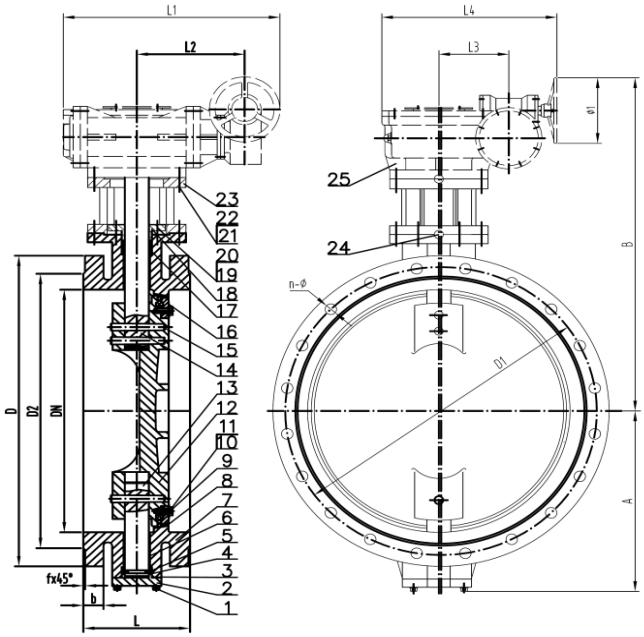

DN300–DN500

NO.	PART NAME	MATERIAL
1	BOLT	STAINLESS STEEL
2	COVER	CAST IRON
3	O-RING	EPDM
4	ADJUST WASHER	STAINLESS STEEL
5	SPLIT COLLAR	STAINLESS STEEL
6	BUSHING	PTFE
7	BODY	DUCTILE IRON
8	SEALING SEAT	BRONZE
9	DISC SEALING RING	EPDM
10	BOLT	STAINLESS STEEL
11	PLATE	STAINLESS STEEL
12	DISC	DUCTILE IRON
13	LOWER SHAFT	SS431
14	UPPER SHAFT	SS431
15	PIN	STAINLESS STEEL
16	GLAND	CARBON STEEL
17	O-RING	EPDM
18	PACKING COVER	CAST IRON
19	STUD BOLT	STAINLESS STEEL
20	NUT	STAINLESS STEEL
21	BOLT	STAINLESS STEEL
22	SPRING WASHER	STAINLESS STEEL
23	YOKE	CAST IRON
24	PIN	SS416
25	GEAR BOX	DUCTILE IRON WITH SS304 INPUT SHAFT

KIDS

Fig. KBFV16DE

Double Eccentric Butterfly Valve – Double Flanges

EN593 Series 13

PN16

DIMENSIONS (DN100 – DN1200)

DN	L	A	B	fx45°	D	D1	D2	n-Ø	b	L1	L2	L3	L4	Ø1
100	127	137	310	3	220	180	158	8-19	19	216	60	155	221	180
125	140	150	380	3	250	210	184	8-19	19	270	72	175	253	240
150	140	168	440	3	285	240	212	8-23	19	270	72	175	253	240
200	152	195	489	3	340	295	268	12-23	20	270	72	175	253	240
250	165	223	565	3	405	355	320	12-28	22	270	72	175	253	240
300	178	268	690	4	460	410	370	12-28	24.5	346	96	183	283	300
350	190	288	715	4	520	470	430	16-28	26.5	434	181	94	357	300
400	216	312	763	4	580	525	482	16-31	28	434	181	94	357	300
450	222	338	786	4	640	585	548	20-31	30	434	181	94	357	300
500	229	390	882	4	715	650	609	20-34	31.5	531	200	125	432	400
600	267	445	987	4	840	770	720	20-37	36	574	228	140	501	400
700	292	533	1048	5	910	840	794	24-37	39.5	574	228	140	501	400
800	318	588	1097	5	1025	950	901	24-40	43	574	228	140	501	400
900	330	653	1197	5	1125	1050	1001	28-40	46.5	638	243	162	547	450
100	410	736	1273	5	1255	1170	1112	28-43	50	638	243	162	547	450
1100	440	755	1404	5	1355	1270	1218	32-44	53.5	777	302	236	656	450
1200	470	848	1484	5	1485	1390	1328	32-49	57	777	302	236	656	450

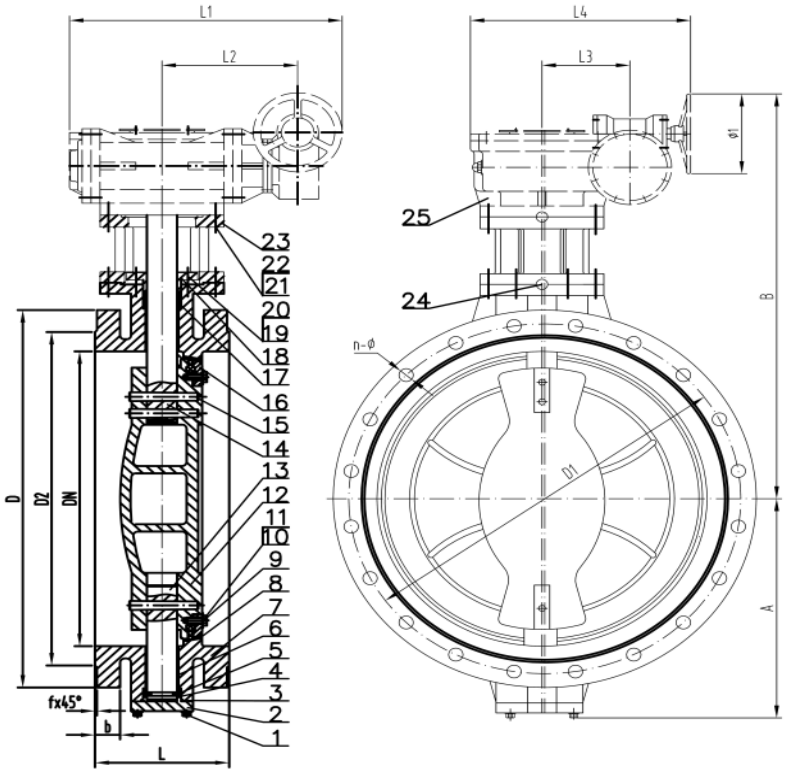

DN600–DN1200

KIDS

Fig. KBCK20

Bronze Check Valve

BS 5154 PN20

Notes:

- Designed to BS 5154
- Pressure Rating: PN20
- Working Medium: Water, Oil, Steam
- Horizontal Swing Pattern
- Threaded Cover
- Suitable for mounting in horizontal and vertical pipe (with vertical flow upwards)
- BS21 Taper Threaded (ISO 7) / BS EN10226-2
- Available with NPT Threads, subject to minimum quantities

Material Specifications

Description	Material
Body	Bronze CC491K
Cap	Bronze CC491K
Disc	Bronze CC491K

Dimensions

DN		d	L	H
Inches	MM			
½”	15	13	58	37
¾”	20	19	66	43
1”	25	25	76	49
1¼”	32	32	88	57.5
1½”	40	39	96	63
2”	50	50	112	72

All dimensions are nominal (indicative)
Actual dimensions may vary

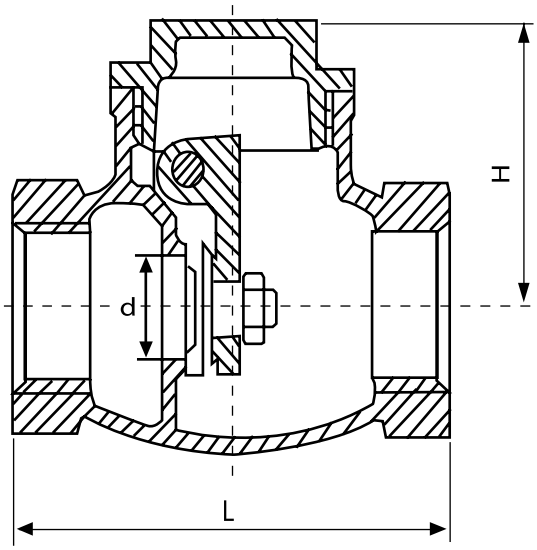

Fig. No. KBCK20

KIDS

Fig. KISCK16

Cast Iron Swing Check Valve

BS5153

PN16

Notes:

- Designed to BS5153 (Short)
- Pressure Rating: PN16
- Working Medium: Water, Oil, Steam
- Bronze Trim
- Flanged to BS4504 PN16 / EN1092-2
- Horizontal Swing Pattern
- Bolted Cover
- Suitable for mounting in horizontal and vertical pipe (with vertical flow upwards)
- Lever & Weight and Air Cushion check valves available upon request.
- Other flange standards available upon request
- Other PN pressure ratings available upon request
- ANSI standards available upon request

Material Specifications

Description	Material
Body	Cast Iron
Trim (body & disc ring)	Bronze
Disc	Cast Iron
Arm / Hinge	Ductile Iron
Arm / Hinge Pin	Stainless Steel
Bonnet	Cast Iron
Shaft	Stainless Steel

Dimensions

DN	D	D1	D2	L	b	f	n-d	H
65	185	145	118	216	20	3	4-ø19	147
80	200	160	132	241	22	3	8-ø19	158
100	220	180	156	292	24	3	8-ø19	184
125	250	210	184	330	26	3	8-ø19	212
150	285	240	211	356	26	3	8-ø23	227
200	340	295	266	495	30	3	12-ø23	263
250	405	355	319	622	32	3	12-ø28	304
300	460	410	370	698	32	4	12-ø28	335
350	520	470	429	787	36	4	16-ø28	355
400	580	525	480	914	38	4	16-ø31	394
450	640	585	548	914	40	4	20-ø31	645
500	715	650	609	1016	42	4	20-ø34	702
600	840	770	720	1219	48	5	20-ø37	812

All dimensions are nominal (indicative)
Actual dimensions may vary

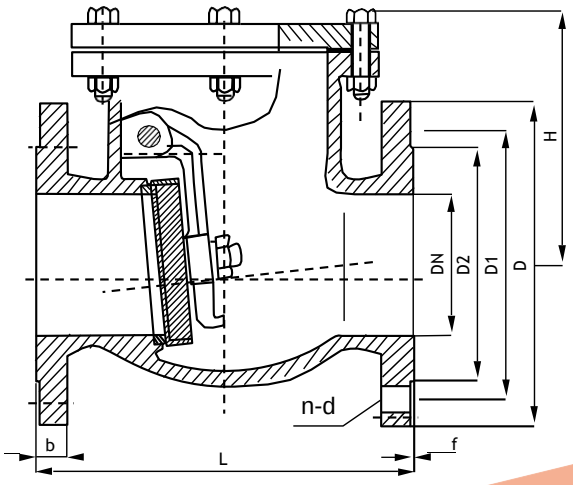

Fig. No.KISCK16

KIDS

Fig. KIDDCK16

Ductile Iron Double Door Check Valve
Wafer Type
PN16

Notes:

- Pressure Rating: PN16
- Working Medium: Water, Oil, Steam
- Stainless Steel Spring
- EPDM Seat
- Face to Face: BSEN558-1 Series 16
- Suitable for mounting between EN1092 flanges
- Suitable for mounting in horizontal and vertical pipeline
- Alternative disc material is available upon request
- Other PN pressure ratings available upon request
- ANSI standards available upon request

Material Specifications

Description	Material
Shaft	SS304
Body	DI
Disc	DI+NP
Spring	SS304
Seat	EPDM

Dimensions

DN	H	L	D1	D
65	34	46	80	127
80	44	64	94	142
100	48	64	117	162
125	50	70	145	192
150	52	76	170	218
200	58	89	224	273
250	78	114	265	328
300	74	114	310	380
350	79	127	360	439
400	88	140	410	490
450	98	152	450	554
500	100	152	505	616
600	124	178	624	724

All dimensions are nominal (indicative)
Actual dimensions may vary

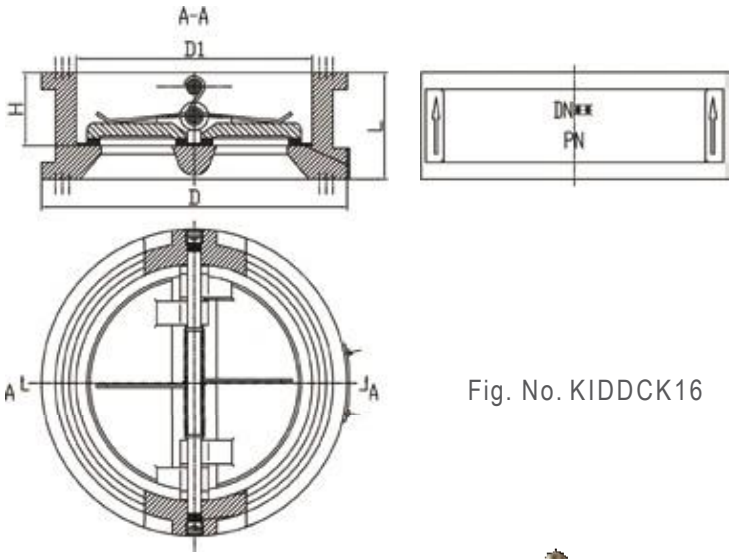

Fig. No. KIDDCK16

KIDS

Fig. KIDDCK25

Ductile Iron Double Door Check Valve
Wafer Type
PN25

Notes:

- Pressure Rating: PN25
- Working Medium: Water, Oil, Steam
- Stainless Steel Spring
- EPDM Seat
- Face to Face: BSEN558-1 Series 16
- Suitable for mounting between EN1092 flanges
- Alternative disc material is available upon request
- ANSI standards available upon request

Material Specifications

Description	Material
Shaft	SS316
Body	DI
Disc	DI+NP
Spring	SS316
Seat	EPDM

Dimensions

DN	H	L	D1	D
65	34	46	80	127
80	44	64	94	142
100	48	64	117	167
125	50	70	145	192
150	52	76	170	222
200	58	89	224	282
250	78	114	265	339
300	74	114	310	399
350	79	127	360	456
400	88	140	410	513
450	98	152	450	563
500	100	152	505	623
600	124	178	624	724

All dimensions are nominal (indicative)
Actual dimensions may vary

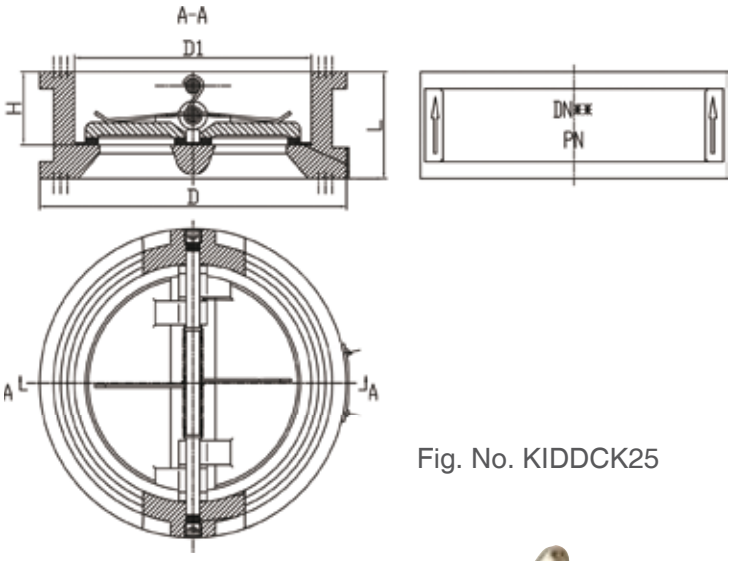

Fig. No. KIDDCK25

KIDS

Fig. KBS20
Bronze Y-Strainer
PN20

Notes:
- Pressure Rating: PN20
- Working Medium: Water, Oil, Steam
- 304 Stainless Steel Screen
- Screwed Cap
- BS21 Taper Threaded (ISO 7) / BS EN10226-2
- Available with NPT Threads, subject to minimum quantities
- Mesh details in separate section

Material Specifications

Description	Material
Body	Bronze CC491K
Screen	Stainless Steel 304
Gasket	PTFE
Cap	Bronze CC491K

Dimensions

DN		L	H
Inches	MM		
½"	15	58	33
¾"	20	70	41
1"	25	88	49
1¼"	32	96	56
1½"	40	107	62
2"	50	126	80

All dimensions are nominal (indicative)
Actual dimensions may vary

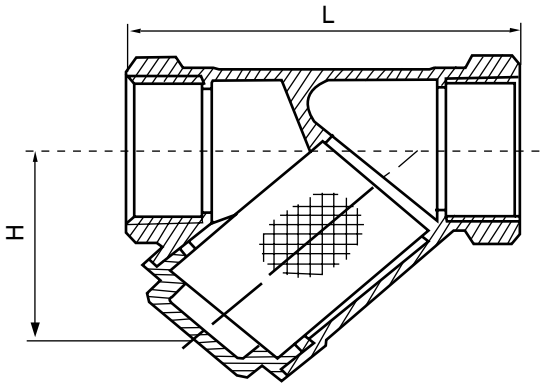

Fig. No. KBS20

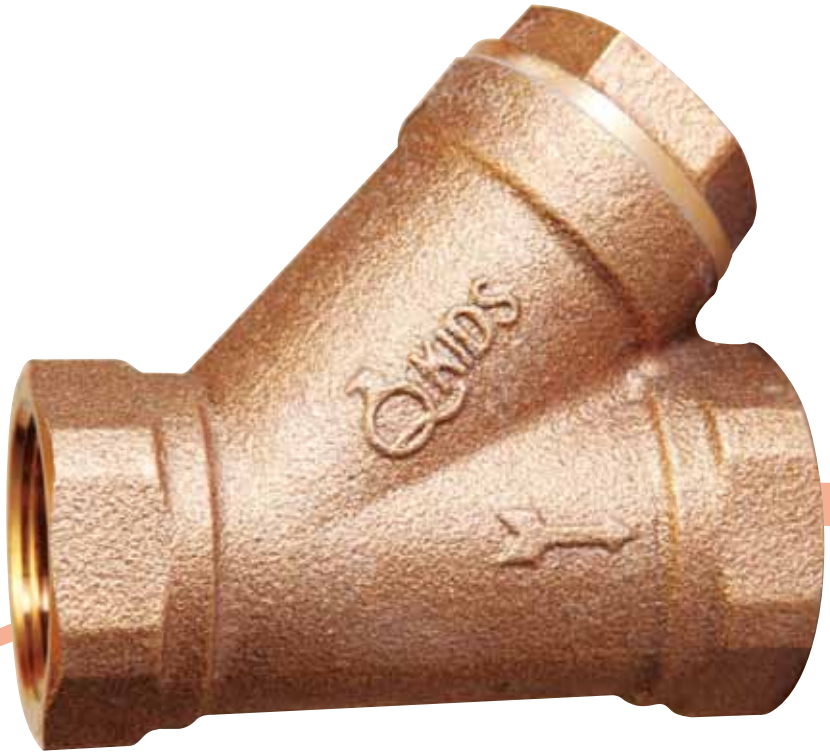

KIDS

Fig. KBS25
Bronze Y-Strainer
PN25

Notes:
- Pressure Rating: PN25
- Working Medium: Water, Oil, Steam
- 304 Stainless Steel Screen
- Screwed Cap
- BS21 Taper Threaded (ISO 7) / BS EN10226-2
- Available with NPT Threads, subject to minimum quantities
- Mesh details in separate section

Material Specifications

Description	Material
Body	Bronze CC491K
Screen	Stainless Steel 304
Gasket	PTFE
Cap	Bronze CC491K

Dimensions

DN		H	L
Inches	MM		
½"	15	40	74.50
¾"	20	45	86.50
1"	25	64	108
1¼"	32	71	122
1½"	40	81	135
2"	50	96	163

All dimensions are nominal (indicative)
Actual dimensions may vary

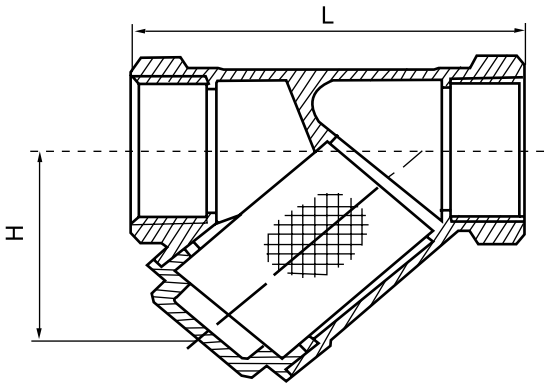

Fig. No. KBS25

KIDS

Fig. KIS16
Cast Iron Y-Strainer
PN16

Notes:
- Pressure Rating: PN16
- Working Medium: Water, Oil, Steam
- Flanged to BS4504 / BS EN1092-2
- Bolted cover with drain plug
- SS304 Mesh
- Other flange standards available upon request
- Other PN pressure ratings available upon request
- ANSI standards available upon request.
- Mesh details in separate section
- Higher sizes available upon request

Material Specifications

Description	Material
Body	Cast Iron
Screen	SS304
Bonnet	Cast Iron
Plug	Cast Iron

Dimensions

DN	L	D	D1	D2	H	b	f	n-d
65	273	185	145	118	189	20	3	4-19
80	292	200	160	132	213	22	3	8-19
100	352	220	180	156	226	24	3	8-19
125	416	250	210	184	273	26	3	8-19
150	470	285	240	211	301	26	3	8-23
200	543	340	295	266	370	30	3	12-23
250	660	405	355	319	457	32	3	12-28
300	762	460	410	370	540	32	4	12-28
350	980	520	470	429	740	36	4	16-28
400	1100	580	525	480	850	38	4	16-31
450	1200	640	585	548	800	40	4	20-31

All dimensions are nominal (indicative)
Actual dimensions may vary

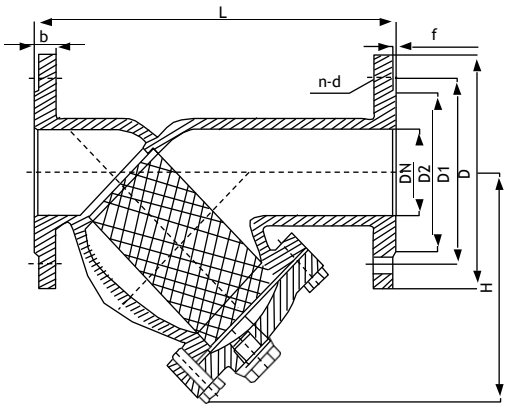

Fig. No. KIS16

KIDS

Fig. KIS25

Ductile Iron Y-Strainer

PN25

Notes:

- Pressure Rating: PN25
- Working Medium: Water, Oil, Steam
- Flanged to BS4504 / BS EN1092-2
- Bolted cover with drain plug
- SS304 Mesh
- Other flange standards available upon request
- ANSI standards available upon request.
- Mesh details in separate section
- Higher sizes available upon request

Material Specifications

Description	Material
Body	Ductile Iron
Screen	SS304
Bonnet	Ductile Iron
Plug	Ductile Iron

Dimensions

DN	L	D	D1	D2	H	b	f	n-d
65	273	185	145	118	189	19	3	8-19
80	292	200	160	132	213	19	3	8-19
100	352	235	190	156	226	19	3	8-23
125	416	270	220	184	273	19	3	8-28
150	470	300	250	211	301	20	3	8-28
200	543	360	310	274	370	22	3	12-28
250	660	425	370	330	457	24.5	3	12-31
300	762	485	430	380	540	27.5	4	16-31
350	980	555	490	448	740	30	4	16-34
400	1100	620	550	503	850	32	4	16-37
450	1200	670	600	548	800	34.5	4	20-37

All dimensions are nominal (indicative)
Actual dimensions may vary

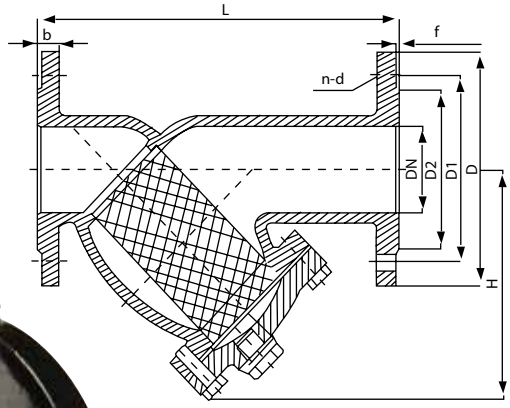

Fig. No. KIS25

KIDS

Fig. KIBS16

Cast Iron Basket Strainer

PN16

Notes:

- Pressure Rating: PN16
- Working Medium: Water, Oil
- Flanged to BS4504 / BSEN1092-2
- Stainless Steel Mesh
- Other flange standards available upon request
- Other PN pressure ratings available upon request
- ANSI standards available upon request.
- Mesh details in separate section
- Higher sizes available upon request

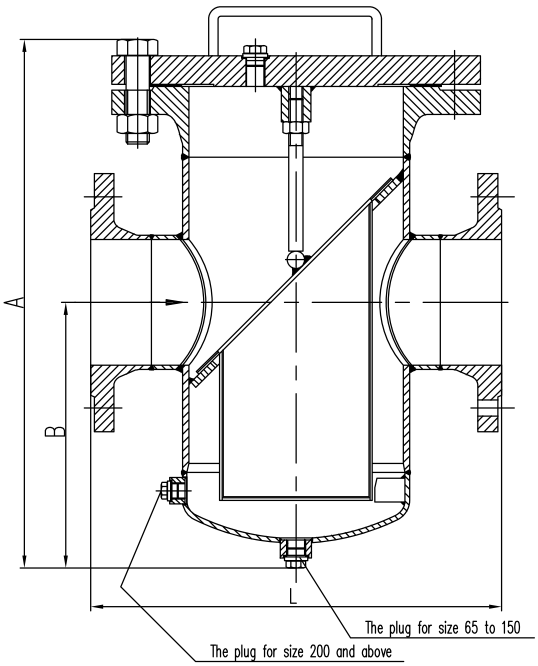

Dimensions

DN	L	A	B
65	210	250	155
80	251	295	190
100	292	330	205
125	334	370	215
150	375	400	235
200	475	510	295
250	511	665	340
300	680	760	405
350	769	930	585
400	824	980	590
450	824	1010	590
500	824	1110	600
600	1054	1690	1175

All dimensions are nominal (indicative)
Actual dimensions may vary

Material Specifications

Description	Material
Body	Cast Iron
Cover	Cast Iron
Screen	Stainless Steel
Plug	Cast Iron

KIDS

Fig. KISD16
Ductile Iron Suction Diffuser
PN16

Material Specifications

Description	Material
Body	Ductile Iron
Cover	Ductile Iron
Screen	Stainless Steel
O Ring	Rubber

Notes:
- Pressure Rating: PN16
- Temperature Rating: -10°C to 100°C
- Flanged ends to BS EN1092-2 PN16

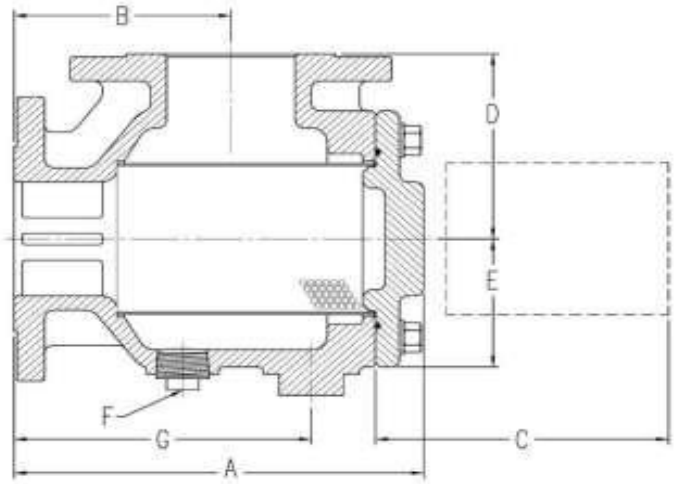

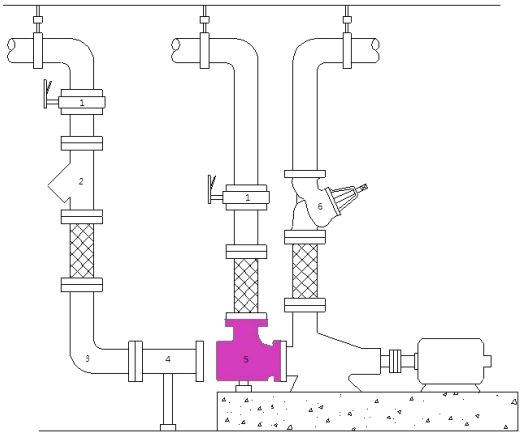

Size Code	Size	Inlet (mm)	Outlet (mm)	Strainer		Dimensions						
				Free open area (cm^2)	Perforation (mm)	A	B	C	D	E	F	G
C	2×2	50	50	95	3.97	205	120	150	105	65	1/2″	155
D	2.5×2.5	65	65	220	3.97	220	125	150	115	80	1/2″	165
F	3×3	80	80	300	3.97	255	135	200	130	90	1″	185
G	4×3	100	80	300	3.97	255	135	200	130	90	1″	185
H	4×4	100	100	470	3.97	330	185	250	145	105	1″	240
I	5×4	125	100	470	3.97	330	185	250	145	105	1″	240
J	6×4	150	100	470	3.97	330	185	250	145	105	1″	240
K	5×5	125	125	730	3.97	400	230	300	180	120	1″	300
L	6×5	150	125	730	3.97	400	230	300	180	120	1″	300
AL	8×5	200	125	840	3.97	400	220	300	205	140	1″	275
M	6×6	150	150	840	3.97	400	220	300	210	140	1″	275
N	8×6	200	150	840	3.97	400	220	300	205	140	1″	275

KIDS

Fig. KISD16
Ductile Iron Suction Diffuser
PN16

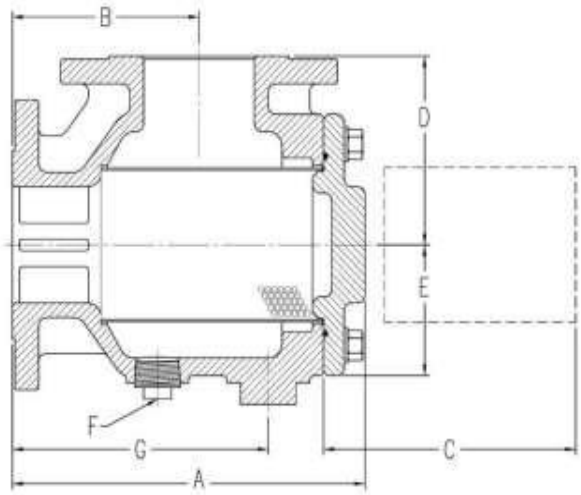

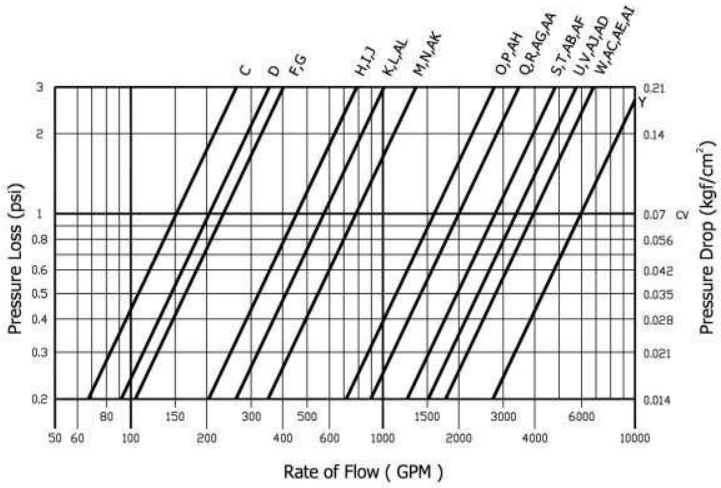

Size Code	Size	Inlet (mm)	Outlet (mm)	Strainer		Dimensions (mm)						
				Free open area (cm^2)	Perforation (mm)	A	B	C	D	E	F	G
AK	10×6	250	150	1470	3.97	500	280	400	240	170	1″	370
O	8×8	200	200	1470	3.97	500	280	400	240	170	1″	370
P	10×8	250	200	1470	3.97	500	280	400	240	170	1″	370
AH	12×8	300	200	2270	3.97	625	325	500	280	190	1″	425
Q	10×10	250	250	2270	3.97	615	325	500	280	190	1″	425
R	12×10	300	250	2270	3.97	615	325	500	280	190	1″	425
AG	14×10	350	250	3000	3.97	690	380	550	305	240	1″	485
AA	16×10	400	250	3150	3.97	695	380	550	325	260	1″	480
S	12×12	300	300	3000	3.97	680	380	550	305	240	1″	485
T	14×12	350	300	3000	3.97	680	380	550	305	240	1″	485
AB	16×12	400	300	3150	3.97	705	380	550	325	260	1″	480
AF	18×12	450	300	3570	3.97	770	430	650	320	240	1″	480
U	14×14	350	350	4420	3.97	785	420	650	355	280	1″	550
V	16×14	400	350	4420	3.97	785	420	650	355	280	1″	550
AJ	18×14	450	350	4420	3.97	785	420	650	355	280	1″	550
AD	20×14	500	350	6320	3.97	1020	600	850	500	360	1″	750
W	16×16	400	400	4790	3.97	785	450	650	400	320	1″	550
AC	18×16	450	400	5100	3.97	825	450	700	400	320	1″	580
AE	20×16	500	400	6320	3.97	1020	600	850	500	360	1″	750
AI	22×16	550	400	6550	3.97	1050	600	900	500	360	1″	750
Y	20×20	500	500	8810	3.97	1070	650	900	500	400	1″	750

KIDS

STRAINER MESH DETAILS

MESHES OF STRAINER FOR PN25 (KBS25,KBSBL25)

DN	Diameter of Hole	Thickness	Free Area Percentage	Meshes/cm2	Material
DN15	0.7mm	0.4	50%	60	Stainless Steel 304
DN20	0.7mm	0.4	50%	60	
DN25	0.7mm	0.4	50%	60	
DN32	1.4mm	0.5	46%	28	
DN40	1.4mm	0.5	46%	28	
DN50	1.4mm	0.5	46%	28	

MESHES OF STRAINER FOR PN20 (KBS20)

DN	Diameter of Hole	Thickness	Free Area Percentage	Meshes/cm2	Material
DN15	0.7mm	0.4	50%	60	Stainless Steel 304
DN20	0.7mm	0.4	50%	60	
DN25	0.7mm	0.4	50%	60	
DN32	1.4mm	0.4	46%	28	
DN40	1.4mm	0.4	46%	28	
DN50	1.4mm	0.4	46%	28	

MESHES OF STRAINER FOR PN16 /PN 25 (KIS16 / KIS25)

DN	Diameter of Hole	Thickness	Meshes /cm2	Material
DN65	1.2 mm	0.8	36	Stainless Steel 304
DN80	1.2 mm	0.8	36	
DN100	3.0 mm	1	9	
DN125	3.0 mm	1	9	
DN150	3.0 mm	1	9	
DN200	3.0 mm	1	9	
DN250	3.0 mm	1	9	
DN300	3.0 mm	1	9	
DN350	3.0mm	1	9	
DN400	3.0mm	1.75	9	
DN450	3.0mm	1.75	9	
DN500	3.0mm	2	9	
DN600	3.0mm	2	9	

MESHES OF BASKET STRAINER PN16 (KIBS16)

DN	Diameter of Hole	Thickness	Material
DN65	1.5	0.5	Stainless Steel 304
DN80	1.5	0.5	
DN100	3	1	
DN125	3	1	
DN150	3	1	
DN200	3	1	
DN250	3	1	
DN300	3	1	
DN350	3	1	
DN400	3	1	
DN450	3	1	
DN500	3	1	
DN600	3	1	

Fig. KUC16

Double Rubber Sphere Flexible Connector PN16

Notes:

- Pressure Rating: PN16
- UK end connection: BS21 Taper Threaded (ISO7) / BS EN10226-2
- Available with NPT threads, subject to minimum quantities
- Minimizes transmission of vibration and noise
- Absorbs expansion, contraction and misalignment within allowable movements
- Precision moulded of synthetic rubber reinforced with nylon cord
- Can withstand chemical corrosion to resist acid and ozone attack
- Must not exceed allowable movement as per below table
- The Pipes must be properly aligned and anchored prior to installation of flexible connectors (i.e. flexibles must not bear the weight of the pipes).
- The flexibles should be installed in their 'relaxed' state (i.e. not compressed, extended, twisted...etc)
- Other PN pressure ratings available upon request
- Other body material (NBR, Viton..etc) available upon request

Dimensions

DN		(L) Neutral Length mm	Allowable Movement			
			(mm)			(deg)
Inches	MM		Axial Compression	Axial Extention	Lateral Deflection	Angular Deflection
½"	15	175	22	5	22	30
¾"	20	175	22	5	22	30
1"	25	175	22	5	22	25
1¼"	32	240	22	5	22	25
1½"	40	240	22	5	22	20
2"	50	250	22	5	22	15

All dimensions are nominal (indicative)
Actual dimensions may vary

Material Specifications

Description	Material
Body	EPDM
Reinforce	Nylon Cord Fabric
Union	Malleable Iron Zinc Plated

We highly recommend to use with limited wiring.
Please refer Fig. No. KUC16LW

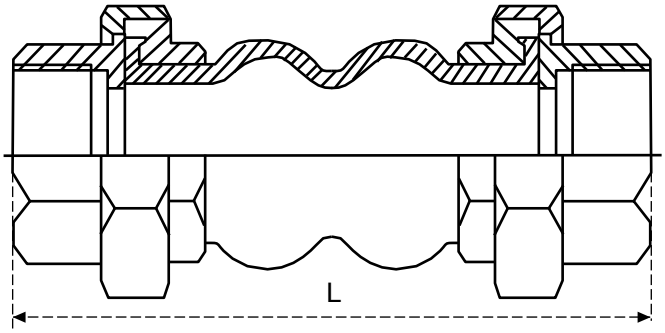

Fig. No. KUC16

KIDS

Fig. KFC16

Flanged Single Rubber Bellow Flexible Connector PN16

Notes:

- Pressure Rating: PN16
- Four way greater movements provide high level of installation flexibility
- Precision moulded of synthetic rubber reinforced with nylon type cord
- Excellent ability to absorb vibration and sound, withstands high pressure
- Flanges drilled to BS4504 / BS EN1092-1
- The Pipes must be properly aligned and anchored prior to installation of flexible connectors (i.e. flexibles must not bear the weight of the pipes).
- The flexibles should be installed in their 'relaxed' state (i.e. not compressed, extended, twisted...etc)
- Other flange standards available upon request
- Other PN pressure ratings available upon request
- Other body material (NBR, Viton…etc) available upon request

Material Specifications

Description	Material
Body	EPDM
Reinforce	Nylon Cord Fabric
Wire	Hard Steel Wire
Flange	Mild Steel Zinc Plated

- **We highly recommend to use with control rods. Please refer Fig. No. KFC16CR**
- **Please note that control rods must be used**
  a) if the adjoining pipes are not fully anchored
  b) if the allowable movements are likely to be exceeded
  c) if flexible is installed vertically
- **However, we recommend flexible connectors with control rods for all situations**

Dimensions

DN		Face to Face (L)	Allowable Movement			
			(mm)			(deg)
Inches	MM		Axial Compression	Axial Extention	Lateral Deflection	Angular Deflection
2½	65	150	15	8	12	15
3	80	150	15	8	12	15
4	100	150	15	12	14	15
5	125	150	15	12	14	15
6	150	150	20	12	14	15
8	200	150	25	12	22	15
10	250	200	25	16	22	15
12	300	200	25	16	22	15

All dimensions are nominal (indicative)
Actual dimensions may vary

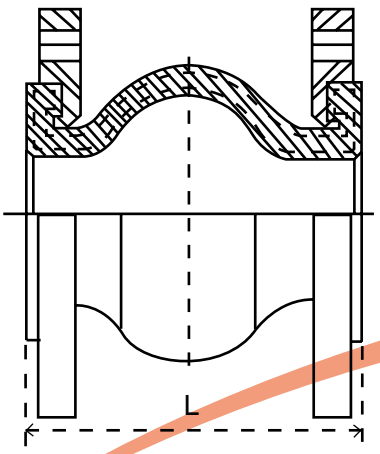

Fig. No. KFC16

QKIDS

Fig. KFC16CR

Flanged Single Rubber Bellow Flexible Connector with Control Rods PN16

Notes:

- Pressure Rating: PN16
- Four way greater movements provide high level of installation flexibility
- Precision moulded of synthetic rubber reinforced with nylon type cord
- Excellent ability to absorb vibration and sound, withstands high pressure
- Flanges drilled to BS4504 / BS EN1092-1
- The Pipes must be properly aligned and anchored prior to installation of flexible connectors (i.e. flexibles must not bear the weight of the pipes).
- The flexibles should be installed in their 'relaxed' state (i.e. not compressed, extended, twisted...etc)
- Other flange standards available upon request
- Other PN pressure ratings available upon request
- Other body material (NBR, Viton…etc) available upon request

Material Specifications

Description	Material
Body	EPDM
Reinforce	Nylon Cord Fabric
Wire	Hard Steel Wire
Flanges	Mild Steel Zinc Plated
Long Bolt	Mild Steel Zinc Plated
Triangle Restrict	Mild Steel Zinc Plated/ Cast Iron

Dimensions

DN		L	L1	No. of Long Bolts
Inches	MM			
2½	65	300	150	2
3	80	310	150	2
4	100	310	150	2
5	125	310	150	2
6	150	310	150	2
8	200	340	150	2
10	250	410	200	3
12	300	410	200	3

- **Easy to align and install**
- **Movements are limited due to Control Rods.**
- **Can be installed vertically.**
  However, Control Rods must be installed in a proper way to ensure allowable movements are not exceeded, and that the flexible does not bear the weight of the pipeworks.

All dimensions are nominal (indicative)
Actual dimensions may vary

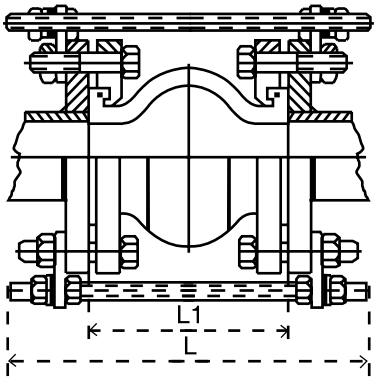

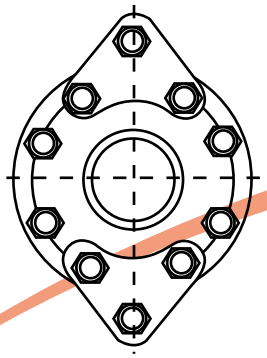

Fig. No. KFC16CR

KIDS

Fig. KFC25CR

Flanged Single Rubber Bellow Flexible Connector with Control Rods PN25

Notes:

- Pressure Rating: PN25
- Four way greater movements provide high level of installation flexibility
- Precision moulded of synthetic rubber reinforced with nylon type cord
- Excellent ability to absorb vibration and sound, withstands high pressure
- Flanges drilled to BS4504 / BS EN1092-1
- The Pipes must be properly aligned and anchored prior to installation of flexible connectors (i.e. flexibles must not bear the weight of the pipes).
- The flexibles should be installed in their 'relaxed' state (i.e. not compressed, extended, twisted...etc)
- Other flange standards available upon request
- Other PN pressure ratings available upon request
- Other body material (NBR, Viton…etc) available upon request

Material Specifications

Description	Material
Body	EPDM
Reinforce	Nylon Cord Fabric
Wire	Hard Steel Wire
Flanges	Mild Steel Zinc Plated
Long Bolt	Mild Steel Zinc Plated
Triangle Restrict	Mild Steel Zinc Plated/ Cast Iron

Dimensions

DN		L	L1	No. of Long Bolts
Inches	MM			
2½	65	300	150	2
3	80	310	150	2
4	100	310	150	2
5	125	310	150	2
6	150	310	150	2
8	200	340	150	2
10	250	410	200	3
12	300	410	200	3

- **Easy to align and install**
- **Movements are limited due to Control Rods.**
- **Can be installed vertically.**
  However, Control Rods must be installed in a proper way to ensure allowable movements are not exceeded, and that the flexible does not bear the weight of the pipeworks.

All dimensions are nominal (indicative)
Actual dimensions may vary

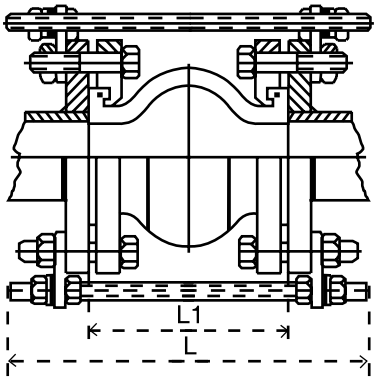

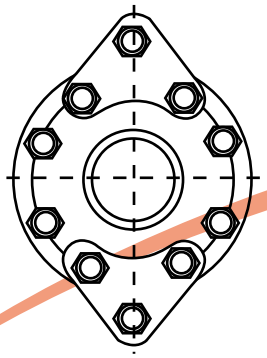

Fig. No. KFC25CR

KIDS

Fig. KSSM16

Stainless Steel Metering Station

BS 7350 PN16

Notes:

- Compliant to BS 7350
- Pressure Rating: PN16
- Suitable to fit between BS EN1092 flanges

Dimensions

DN	D	E	H	B	α
65	127	68.7	18	112	90
80	142	80.7	18	118	90
100	162	105.1	18	125	90
125	192	129.95	18	135	90
150	218	155.4	18	145	90
200	273	203.2	18	165	90
250	329	254	18	185	90
300	384	304.8	18	205	90
350	444	337	21	222	90
400	495	385	21	240	90
450	555	432	21	261	90
500	617	482	21	283	90
600	734	591	25	325	90

All dimensions are nominal (indicative)
Actual dimensions may vary

Material Specifications

Description	Material
Body	SS304
Extension Tube	SS304
Pressure Test Valves	DZR Brass

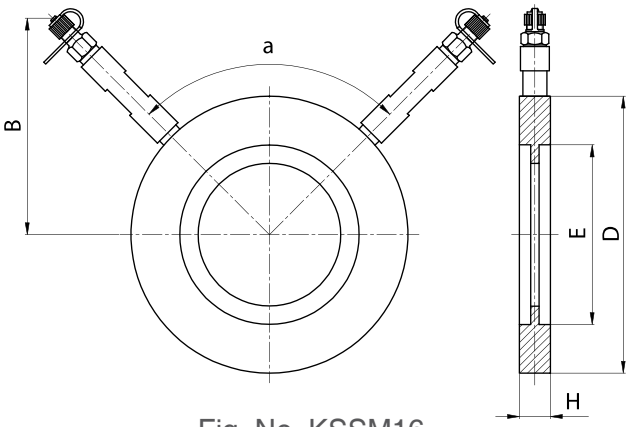

Fig. No. KSSM16

KIDS

Fig. KBPRV20

Bronze Pressure Reducing Valve

PN20

Notes:

- Direct Acting Spring Loaded PRV
- Pressure Rating: PN20
- Working Medium: Water, Gas
- Female Threaded End to ISO 7 Taper
- Max inlet Pressure: 20 bar
- Max Temperature: 70°C
- Max outlet Pressure: 1 to 4 bar (DN15-DN25)
  1 to 5 bar (DN32-DN100)

Material Specifications

Description	Material
Tap Lid	Brass CW617N
Pressure Adjusting Screw	Brass CW617N
Pressure Adjusting Spring	SS304
Body	Bronze CC491K
Bonnet	Bronze CC491K
Stem	Brass CW617N
Valve Core	Bronze CC491K
Screen	SS304
Disk	Brass CW617N
Gasket	NBR
Diaphragm (DN32-100)	EPDM + Polyamide Fiber
Diaphragm Plate (DN32-100)	Steel
Plug	Brass CW617N

Dimensions

DN		L	L1	H	H1
Inches	MM				
½"	15	89	41.5	121	46
¾"	20	92	43	121	46
1"	25	98	46	121	46
1¼"	32	126	55.5	192	62
1½"	40	126	55.5	192	62
2"	50	168	72	272	85
2½"	65	174	75.5	272	85
3"	80	225	98.5	385	113
4"	100	230	104.5	385	113

All dimensions are nominal (indicative)
Actual dimensions may vary

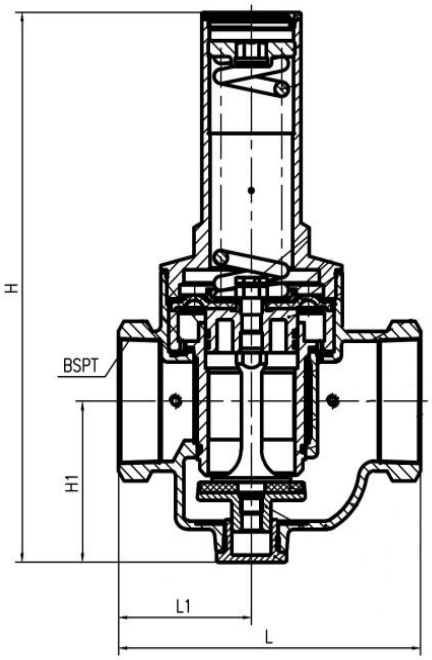

Fig. KBPRV20 PN20 DN15-DN25

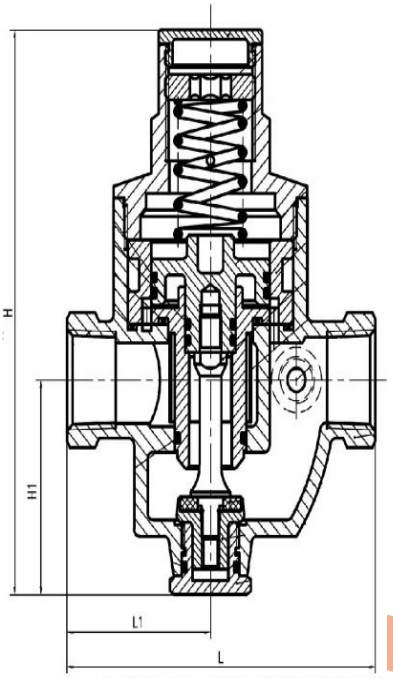

Fig. KBPRV20 PN20 DN32-DN100

KIDS

Fig. KAV

Brass Auto Air Vent (Threaded) with detachable check valve PN10

Notes:

- Pressure Rating: PN10
- Brass body with detachable check valve
- Working Medium: Water
- Uk End Connection: BS21 Taper
- US End Connection: NPT
- Material: Brass CW614N
- Available in sizes 15mm, 20mm & 25mm

Dimensions

DN		H	L
Inches	MM		
½”	15	76	50
¾”	20	76	50
1”	25	76	50

All dimensions are normal (indicative)
Actual dimensions may vary

Fig. No. KAV

QKIDS

Fig. KIAV16
Ductile Iron Orifice Air Valve
PN16

Material Specifications

Description	Material
Body	Ductile Iron
Orifice Cover	Ductile Iron
Air Release Nipple	Brass
Screw Plug	Brass
Float Ball	ABS
Ball Seal Orifice	EPDM

Notes:
- Pressure Rating: PN16
- Temperature Rating: -10°C to 100°C
- Flanged ends to BS EN1092-2 PN16

DN (Inches)	DN (mm)	L (mm)	H (mm)
1	25	147	185
1 ½”	40	224	187
2”	50	273	214
2 ½”	65	273	214
3”	80	283	244
4”	100	302	270
5”	125	353	323
6”	150	353	323
8”	200	433	401
10”	250	491	450

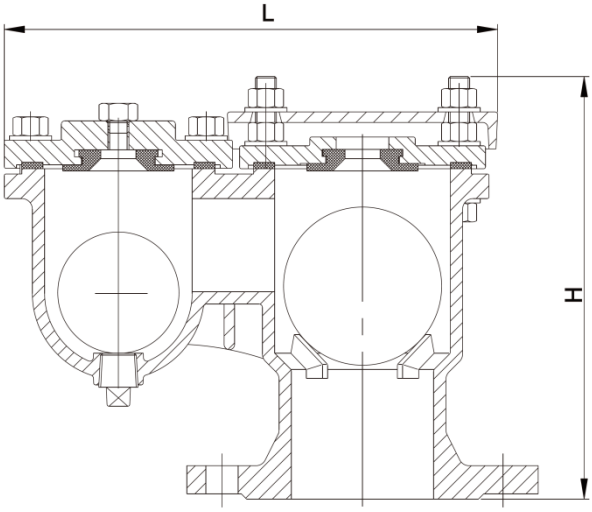

KIDS

Fig. KDC

DZR Brass Draining Cock

BS2879 **PN16**

Notes:

- Designed to BS2879
- Pressure Rating: PN16
- Working Medium: Water
- Taper Pipe Thread: ISO7

Material Specifications

Description	Material
Stem	DZR Brass CW602N
Bonnet	DZR Brass CW602N
Disc	DZR Brass CW602N
Body	DZR Brass CW602N

Dimensions

DN		L	L1
Inches	MM		
½”	15	56	13
¾”	20	64	16
1”	25	89	19

All dimensions are normal (indicative)
Actual dimensions may vary

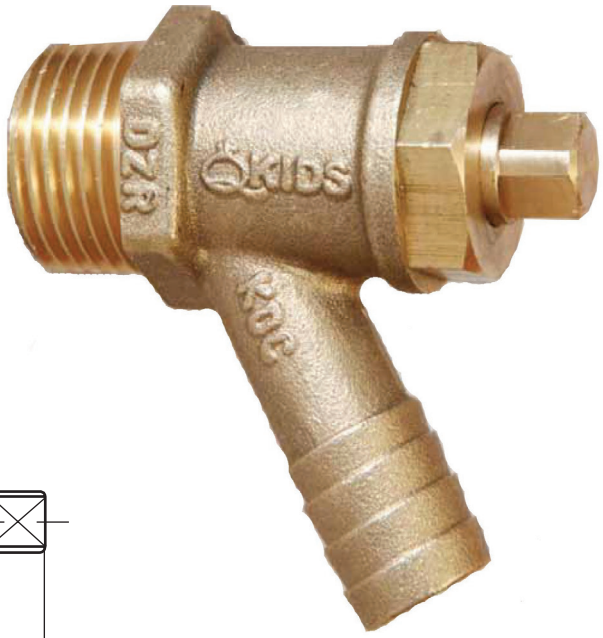

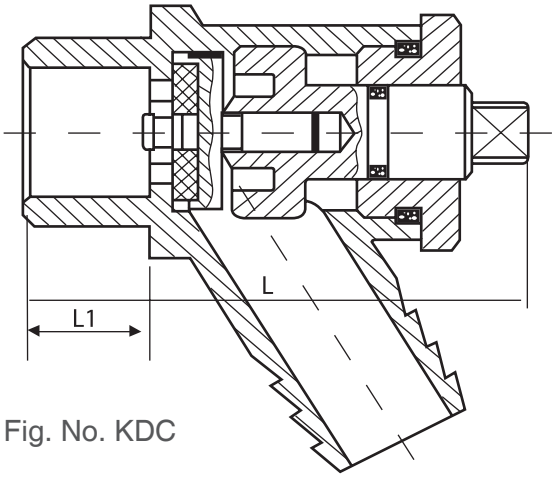

Fig. No. KDC

QKIDS

Fig. KHB

Brass Bibcock with Hose Union

PN10

Notes:

- Pressure Rating: PN10
- Brass Body
- Available in size ½” & ¾”

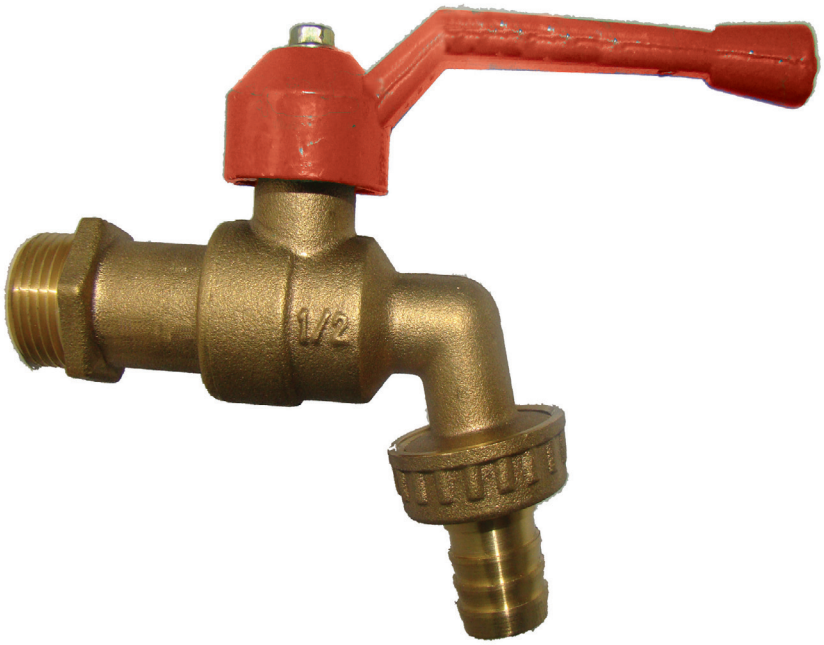

Fig. No.KHB

KIDS

Fig. KBAV16

Brass Angle Valve
PN16

Fig. No. KBAV16

Material Specifications

Description	Material
Handwheel	ZZnAID4-0.5
Ball	Brass CW617N
Body	Brass CW617N

Notes:
- Pressure Rating: PN16
- Working Medium: Water, Gas
- Taper Pipe Thread to ISO7
- Available in size ½ “

Fig. KTP

DZR Test Points
PN25

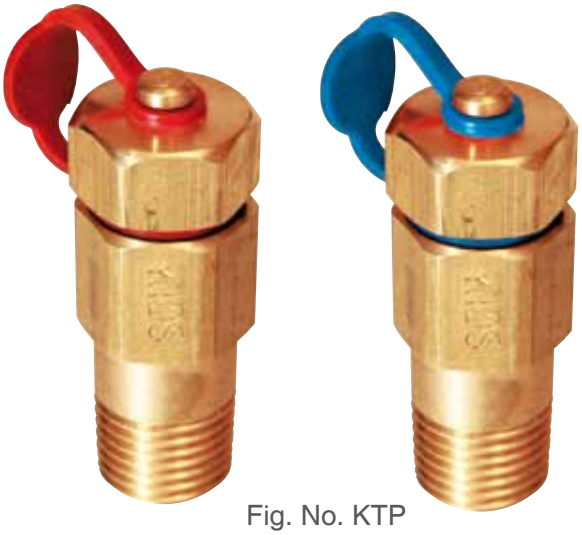

Fig. No. KTP

Notes:
- Pressure Rating: PN25
- DZR body
- Size: ¼”

Fig. KFH16

Stainless Steel Flexible Hose with Threaded Brass Coupling
PN16

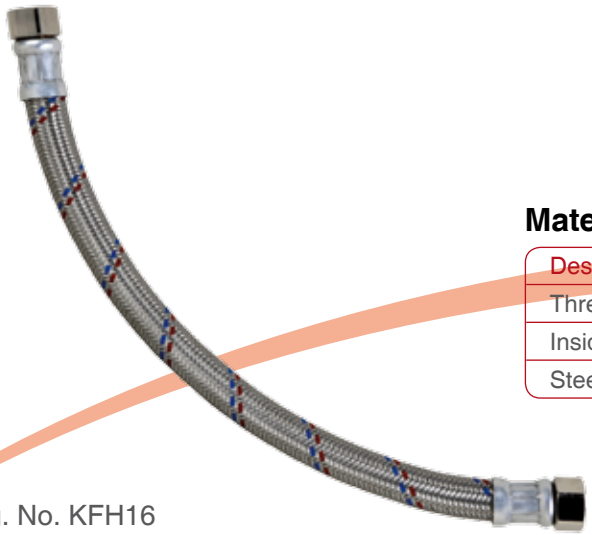

Fig. No. KFH16

Material Specifications

Description	Material
Threaded Nut	Brass CW617N
Inside Rubber Tube	EPDM
Steel Wire	SS 301

Notes:
- Pressure Rating: PN16
- Taper Pipe Thread to ISO 7
- Available from ½” to 1”
- Approximate length: 300mm
- Higher sizes available upon request
- Subject to minimum quantities

KIDS

NUTS & BOLTS
HEX BOLTS
for Iron Valves Flanged to PN16 (EN1092-2/BS4504)

Gate Valves
Globe Valves
Double Regulating Valves
Double Flanged Butterfly Valves
Strainers
Swing Check Valves
Flexible Connectors with Control Rods (only upto 600mm)

Dimensions

Size	L	Bolt Size	No. of Bolts per Valve
DN 65	75	M 16	4x2
DN 80	75	M 16	8x2
DN 100	80	M 16	8x2
DN 125	85	M 16	8x2
DN 150	90	M 20	8x2
DN 200	95	M 20	12x2
DN 250	105	M 24	12x2
DN 300	110	M 24	12x2
DN 350	120	M 24	16x2
DN 400	120	M 27	16x2
DN 450	125	M 27	20x2
DN 500	130	M 30	20x2
DN 600	140	M 33	20x2
DN 700	130	M 33	24x2
DN 800	140	M 36	24x2
DN 900	150	M 36	28x2
DN 1000	165	M 39	28x2
DN 1100	190	M 39	32x2
DN 1200	190	M 45	32x2

Specifications

Material for Bolts: As per ASTM A193 Gr. B7 Carbon Steel

Material for Nuts: As per ASTM A194 Gr. 2H

Galvanized

Note 1: 1 set of HEX BOLT = 1 no. Hex Bolt + 1 no. washer + 1 no. nut
Note 2: There are 2 sets of HEX BOLT for each valve
Note 3: Assuming pipe flange: Steel (EN1092-1) PN16
Assuming valve flange: DI/CI (EN1092-2) PN16 (upto 600mm)
Assuming valve flange: DI (EN1092-2) PN16 (above 600mm)

KIDS

NUTS & BOLTS
LONG STUD BOLTS
for Iron Valves Flanged to PN16
(EN1092-2/BS4504)

Iron Butterfly Valves (Wafer / Lugged) PN16

Face to Face: BS EN558-1 Basic Series 20
Flanged: BS 4504 / EN1092-2 PN16
Assumed Pipe Flange: Steel (EN1092-1) PN16

Dimensions

Size	No. of Bolts per Valve	Length	Bolt Size
DN 65	4	140	M 16
DN 80	8	140	M 16
DN 100	8	150	M 16
DN 125	8	160	M 16
DN 150	8	175	M 20
DN 200	12	175	M 20
DN 250	12	195	M 24
DN 300	12	210	M 24
DN 350	16	225	M 24
DN 400	16	250	M 27
DN 450	20	270	M 27
DN 500	20	300	M 30
DN 600	20	330	M 43

Iron Wafer Check Valves (Double Door) PN16

Face to Face: BS EN558-1 Series 16
Suitable to mount betwen EN1092 flanges
Assumed Pipe Flange: Steel (EN1092-1) PN16

Dimensions

Size	No. of Bolts per Valve	Length	Bolt Size
DN 65	4	145	M 16
DN 80	8	160	M 16
DN 100	8	160	M 16
DN 125	8	170	M 16
DN 150	8	200	M 20
DN 200	12	210	M 20
DN 250	12	250	M 24
DN 300	12	250	M 24
DN 350	16	280	M 24
DN 400	16	295	M 27
DN 450	20	310	M 27
DN 500	20	330	M 30
DN 600	20	360	M 33

Specifications

Material for Bolts: As per ASTM A193 Gr. B7 Carbon Steel
Material for Nuts: As per ASTM A194 Gr. 2H
Galvanized

Note: 1 set of LONG STUD BOLT = 1 no. Long Stud Bolt + 2 nos. washers + 2 nos. nuts

KIDS