Fig. KFDRV25

Bronze Fixed Orifice Double Regulating Valve

BS 7350 PN25

Notes:

- Designed to BS7350
- Pressure Rating: PN25
- Working Medium: Water, Oil, Steam
- Handwheel operated
- Numerical Indicator
- Inside screw non-rising handwheel
- Characterized regulating disc
- Integral fixed orifice
- Double Regulating(memory stop)
- Supplied with 2 test points
- BS21 Taper Threaded (ISO 7) / BS EN10226-2
- Available with NPT Threads, subject to minimum quantities
- For ½" - ¾" there is a PTFE o-ring on the disc

Material Specifications

Description	Material
Body	Bronze CC491K
Bonnet (½" -1¼")	DZR Brass CW602N
Bonnet (1½" - 2")	Bronze CC491K
Stem	DZR Brass CW602N
Disc	DZR Brass CW602N
Handwheel	Plastic
Orifice Insert	DZR Brass CW602N
Press. Test Points	DZR Brass CW602N

Dimensions

DN		L	H	C
Inches	MM			
½"	15	87	105	46
¾"	20	96	106	51
1"	25	100	127	56
1¼"	32	114	128	57
1½"	40	125	143	61
2"	50	146	144	75

All dimensions are nominal (indicative)
Actual dimensions may vary

- **Superior to variable orifice DRV due to higher accuracy from integral fixed orifice**
- **Flow reading across fixed orifice +/- 5%**
- **Valve must be installed fully in accordance with instructions.**

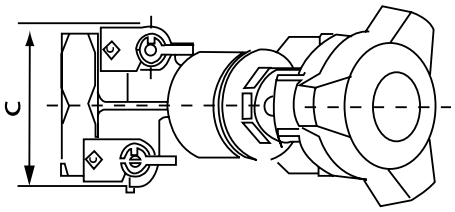

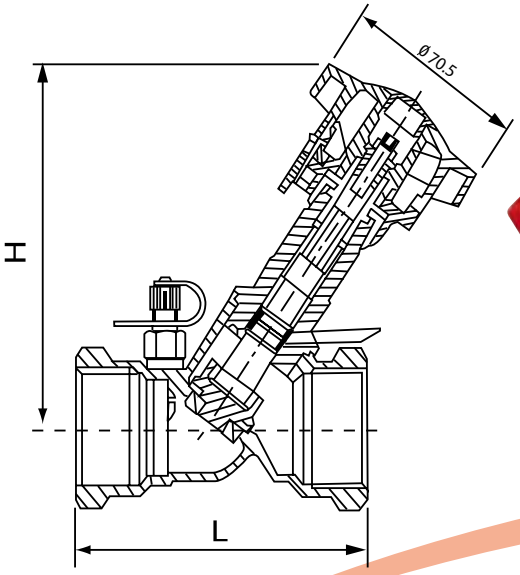

Fig. No. KFDRV25

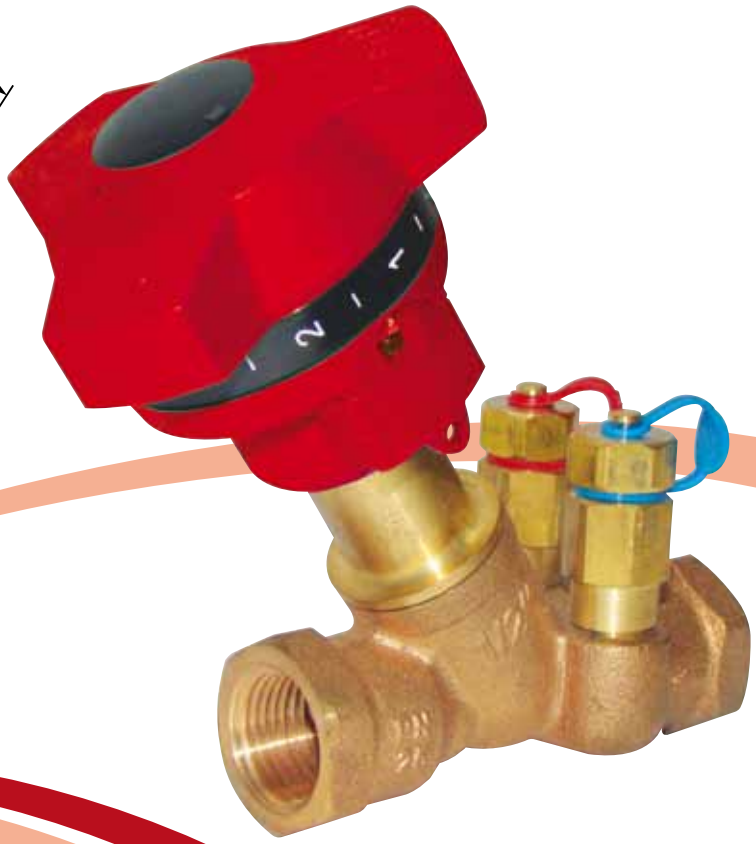

KIDS